Klima-Set
Differential pressure switch for air

KS…A2-7

5.21

DUNGS®
Combustion Controls

neu novità
nouveau new

- **RoHS II 2011/65/EU**
- **max. operating pressure 10 kPa**



Technical description

Two separate pressure chambers with pressure-side connection to hose nipples.
Connection of ø 4 mm for each pressure chamber.
Reference value (pressure difference) can be set directly. Reference value can be read off externally through the transparent hood.
Precise function through special switching system in a frictionless bearing. Contact switchover is performed when the set reference value is exceeded or undershot. Complete mounting kit enclosed.

Application

The equipment is used in ventilation and air-conditioning systems, DDC.
It is specially designed for monitoring air ducts, filters, drive units and blowers.

Type testing

Tested according to DIN EN 1854

Printed in Germany • Edition 02.22 • Nr. 260 520

Functional description
Differential pressure switch in pressure and vacuum ranges. The differential pressure acts via the diaphragm against the force of the setting spring on the microswitch.
If the set reference value is exceeded or undershot, the circuit is switched on, off or over.
The differential pressure switch of the Klima-Set works without an auxiliary power.

DDC application
The switching contacts of the Klima-Set are made of gold-plated silver, for 24 V DC; 0.02 A.
When using the Klima-Set in conventional systems at 250 V AC, 4 A ohmic load, 2 A inductive load, cos φ 0.6, the gold-plated coating on the switching contacts burns off.
This makes a subsequent DDC application impossible.

⚠ Make sure that no condensate can enter into the pressure switch. Icing may occur at temperatures below zero which may lead to a malfunction or failure of the equipment.

Specifications

Max. operating pressure	10 kPa (100 mbar)			
Pressure connection	Hose connector for hose ø 4			
Temperature range	Ambient temperature Medium temperature Storage temperature	-15 °C to +85 °C -15 °C to +85 °C -30 °C to +85 °C		
Materials	Housing Switching part Diaphragms Switching contact	Polycarbonate Polycarbonate NBR gold-plated silver (Au), suitable for DDC applications: 24 V DC; 0.02 A		
Switching voltage	Au contact	DC	min. 5 V	max. 24 V
Nominal current	Au contact	DC		20 mA
Switching current	Au contact	DC	min. 5 mA	max. 20 mA
Electrical connection	On terminal screws via cable duct M20 x 1,5			
Protection type	IP 54 as specified in IEC 529 (EN 60529), optional IP 65			
Setting tolerance	see setting range page 4, switching point deviation, relative to nominal value, with vertical mounting position. Rising (↑) or falling (↓) setting available on site.			
Deviation	Permissible deviation of the set value ≤ ± 15 % in the service life test according to EN 1854			

Klima-Set scope of supply mit Zubehör
1. LGW...C2 differential pressure switch
2. Mounting plate
3. Connection hose 4 x 1.5, 2 m
4. fixing screws (6 x)
5. hose connection (2 x)
6. Extension tube (2 x)
7. Operating and assembly instructions

Mounting plate



Hose connection





Fixing screws

Connection hose dia. 4 x 1.5 x 2000





Extension tube

Dimensions [mm]

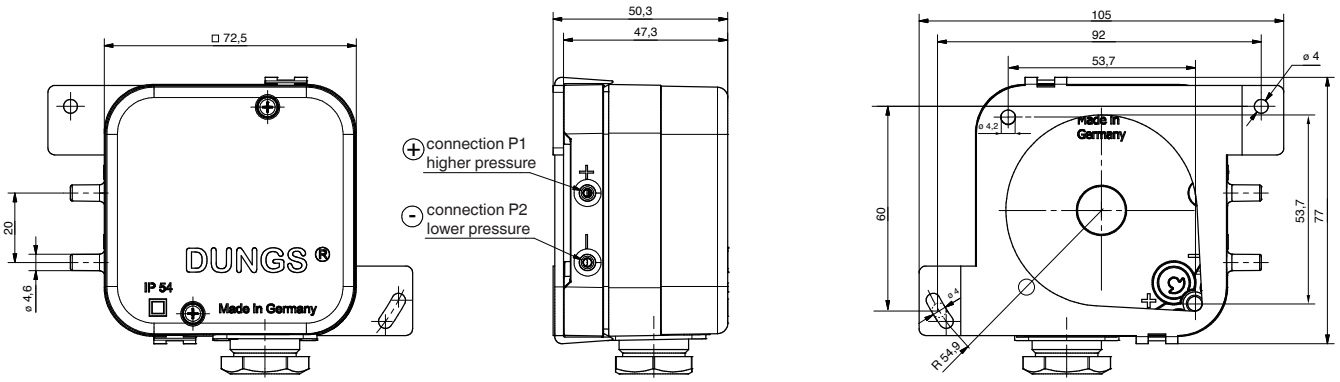

Switching functions

As differential pressure rises:
1 NC opens
2 NO closes

As differential pressure falls:
1 NC closes
2 NO opens

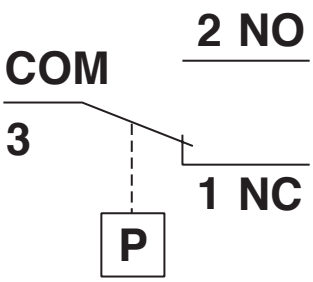

Switching difference Δp

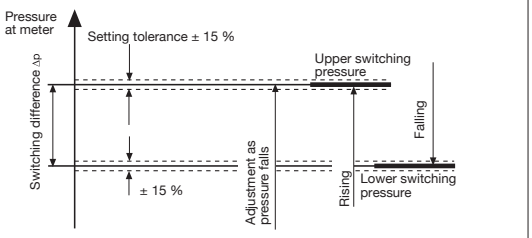

The switching difference Δp is the pressure difference between the upper and lower switching pressures.

Schematic diagram
Application and connection examples

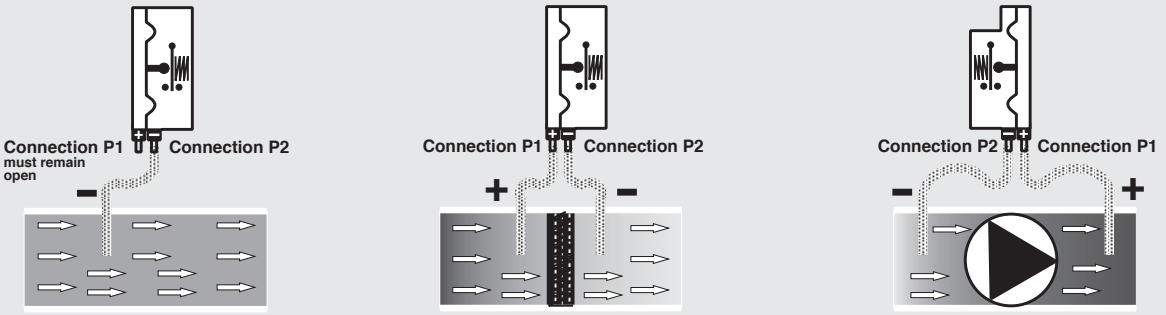

Monitoring system vacuum

To monitor the pressure in vacuum systems.
Connect Klima-Set to the air duct via connection p2 (-).
Do not connect connection p1 (+) to the air duct.
Do not close the hose connection sleeve of connection p1 (+), a connection to atmosphere must exist.
Important: No dirt must enter into the equipment through connection p1 (+).

Filter monitoring

To monitor filter fouling, Klima-Set can be connected as shown above. Connection p1 (+) is connected upstream of the filter and connection p2 (-) downstream of the filter with the air channel in flow direction of volumetric flow.

Blower monitoring

In the blower monitoring system, connection p1 (+) is connected on the pressure side downstream of the blower and connection p2 (-) is connected to the air duct upstream of the blower.

Always connect **higher pressure** to connection p1 (+).
Always connect **higher vacuum** to connection p2 (-).

Example - System pressure

Higher pressure:
e.g. 240 Pa: Connection p1 (+)
Lower pressure:
e.g. 180 Pa: Connection p2 (-)

Example - System vacuum

Lower vacuum:
e.g. -130 Pa: Connection p1 (+)
Higher vacuum:
e.g. -210 Pa: Connection p2 (-)

Klima-Set
Differential pressure switch for air

KS…A2-7

DUNGS®
Combustion Controls

Brief technical data
1mbar = 100 Pa = 0.1 kPa ≈ 10 mm WS 1 Pa = 0.01 mbar ≈ 0.1 mm WS

Type	Order No. with accesssories 1 piece	Setting range [Pa]	min. / max.	Adjust-ment	Switching difference Δp [Pa]	Max. operating pressure [kPa]
KS 150 A2-7	257 842	20-150	± 8 Pa / ± 15 %		≤ 18	10
KS 300 A2-7	257 843	20-300	± 8 Pa / ± 15 %		≤ 20	10
KS 600 A2-7	257 844	30-600	± 10 Pa / ± 15 %		≤ 30	10
KS 1000 A2-7	257 845	0,1-1,0 kPa	- ± 15 %		≤ 40	10

Accesssories/Spare parts for Klima-Set	
KS-accessories complete	258 247
Mounting plate	230 301
Connecting tube ø 4 x 1,5, 2 m (10 x)	230 303
Hose connection (50 x)	230 306
Synthetic tubes (50 x)	230 307
Connector socket	231 770
Line socket	210 317
Assembly set display yellow 24 V	231 774
Assembly set display yellow 230 V	231 773
Assembly set display green 24 V	248 240
Assembly set display green 230 V	248 239
Replacement set cover IP 54	230 276
Replacement set cover IP 65	257 841
Adapter ø 4/6 (2 x)	266 037
Cylinder head screw ø 3x14 (2 x)	266 045

We reserve the right to make any changes in the interest of technical progress.

Head Offices and Factory
Karl Dungs GmbH & Co. KG
Karl-Dungs-Platz 1
D-73660 Urbach, Germany
Telephone +49 7181-804-0
Telefax +49 7181-804-166

Postal address
Karl Dungs GmbH & Co. KG
Postfach 12 29
D-73602 Schorndorf, Germany
e-mail info@dungs.com
Internet www.dungs.com