Table of Contents

Table of Contents . . . . . Page 1
Approvals . . . . . Page 1
Attention . . . . . Page 1
Specification . . . . . Page 2
Lock-up Pressure Parameters. . . . . Page 3
Mounting Preparation . . . . . Page 3
Mounting & Installation . . . . . Page 4
Pressure Tap Connections. . . . . Page 5
Regulator Orifice Diameters . . . . . Page 5
Outlet Pressure Spring Selection . . . . . Page 6
Breather Plug . . . . . Page 6
Vent Limiting Device, Backloading & Venting Page 7
External Impulse . . . . . Page 7
Outlet Pressure Adjustment . . . . . Page 8
Spring Replacement . . . . . Page 8
Flow Curve . . . . . Page 9
Accessories & Replacement . . . . . Page 10
Repair Kits . . . . . Page 10

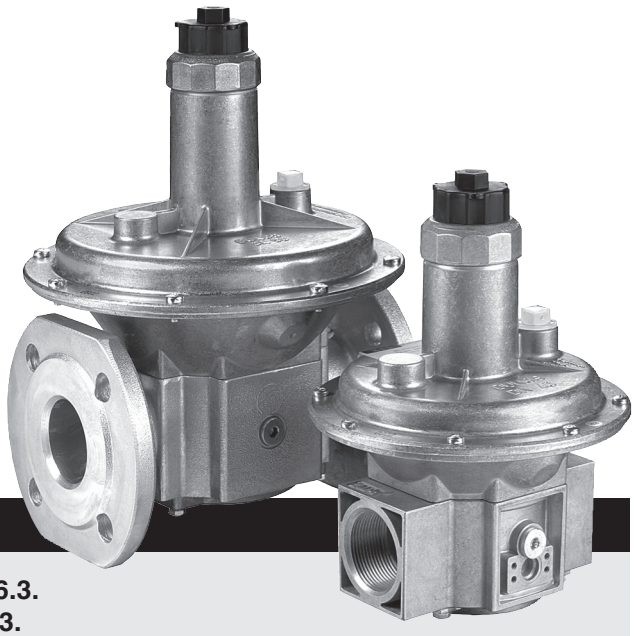

Approvals

FRS 7../6 series are CSA Certified: ANSI Z21.18/CSA 6.3.
FRS 5... series are CSA Certified: ANSI Z21.18/CSA 6.3.

Commonwealth of Massachusetts Approved Product Approval code G1-1107-35

Attention



The installation and maintenance of this product must be done under the supervision of an experienced and trained specialist. Never perform work if gas pressure or power is applied, or in the presence of an open flame.



Please read the instruction before installing or operating. Keep the instruction in a safe place. You find the instruction also at www.dungs.com If these instructions are not heeded, the result may be personal injury or damage to property.



Any adjustment and application-specific adjustment values must be made in accordance with the equipment manufacturers instructions.

Safety first O.K.

On completion of work on the pressure regulator, perform a leakage and function test.

IFGC CSA UL ANSI NFPA

This product is intended for installations covered by, but not limited to, the following codes and standards: NFPA 37, NFPA 86, NFPA 54, CSD-1, UL 795, ANSI Z83.4, ANSI Z83.18, ANSI Z21.13, CSA B149.1, CSA B149.3 and CSA B149.6.

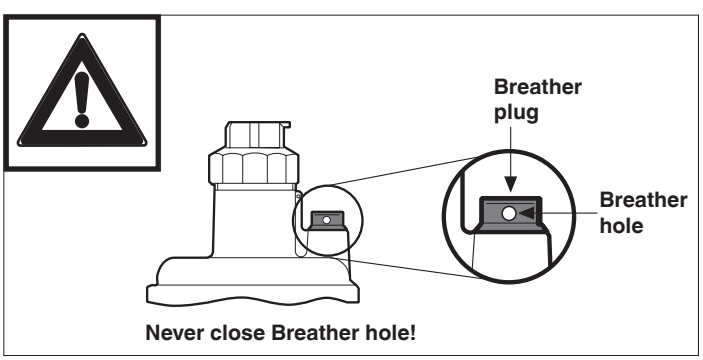

Explanation of symbols

1, 2, 3 ... = Action
• = Instruction

Specification

FRS The FRS series balance type, pressure regulator is a spring-loaded pressure regulator with adjustable setpoint spring and an internal impulse for regulating output pressure.

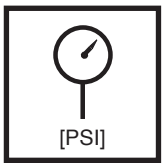

Max. Operating Pressure (MOP)
7 PSI (500 mbar) for FRS 7../6 series.
10 PSI (680 mbar) for special versions of FRS 7../6 series (see P/N's below).
7 PSI (500 mbar) for FRS 5... Flanged series.
5 PSI (350 mbar) applies to the CSA Certification for FRS 7../6 and for FRS 5... Flanged series.

Output pressure range
Adjustable with different springs
1 to 80 in. W.C.

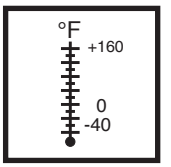

Ambient / Fluid Temperature
FRS 7../6 NPT Threaded Series:
- +5 °F to +160 °F for up to 7 or 10 PSI, depending on model, for regulating behavior (+/- 10 % of setpoint)
- CSA Certified for -40°F to +160 °F: Diaphragms are suitable for the low temperature, but there may be out of range regulating behavior.

FRS 5... Raised Face Flange Series:
- +5 °F to +160 °F (-15 °C to +70 °C) for up to 7 PSI.



Maximum pressure drop and gas velocity
The maximum pressure drop is limited by the celocity of the gas. Do not exceed a gas velocity of 30 meters/s.

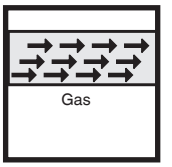

Gases
Dry, natural gas, propane, butane; other noncorrosive gases. Suitable for up to 0.1% by volume, dry H_2S. A "dry" gas has a dew point lower than +15 °F and its relative humidity is less than 60 %.

Materials in contact with Gas
Housing: Aluminum & Steel
Seals & Diaphragm: NBR-based rubber.

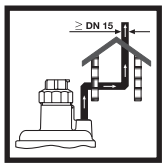

Vent Limiting Device and Vent Line Connection
The FRS/6 has an internal, factory installed vent limiter, which limits the escape of gas to less than 0.5 CFH @ 5 PSI in case atmospheric diaphragm ruptures. Vent limiting device also complies with EN 88-1 & ISO 23551-2. Venting required unless otherwise accepted by the authority having jurisdiction.



Droop and Hysteresis
Hysteresis is less than 10 % for up to 7 PSI inlet.
Average droop at 20:1 turndown is 10 % for up to 7 PSI.

Lock-up Rating
- The FRS meets the ANSI Z.21.80/CSA 6.22 as Class I, which allows lockup rating not more than 150 % or 5 in. W.C, whichever is greater.
- The FRS meets EN 88-1 as SG30, which allows lock-up as high as +30 % of the outlet pressure.
- See Lock-up Pressure Parameters on page 3 for more details.

Body Size	Size		Order No. 7 PSI max.	Order No. 10 PSI max.
FRS 705/6	1/2"	NPT	229595	269318
FRS 707/6	3/4"	NPT	229608	267003
FRS 710/6	1"	NPT	229609	267005
FRS 712/6	1 1/4"	NPT	229610	267007
FRS 715/6	1 1/2"	NPT	229611	267009
FRS 720/6	2"	NPT	229612	267011
FRS 725/6	2 1/2"	NPT	229613	269324
FRS 730/6	3"	NPT	229614	269327
FRS 5040 (internal impulse)	1 1/2"	DN (ISO) Flanged	065144	not available
FRS 5050 (internal impulse)	2"	DN (ISO) Flanged	065151	not available
FRS 5065 (internal impulse)	2 1/2"	DN (ISO) Flanged	058792	not available
FRS 5080 (internal impulse)	3"	DN (ISO) Flanged	079681	not available
FRS 5100 (internal impulse)	4"	DN (ISO) Flanged	082552	not available
FRS 5125 (internal impulse)	5"	DN (ISO) Flanged	013250	not available
FRS 5150 (internal impulse)	6"	DN (ISO) Flanged	013268	not available

Lock-up Pressure Parameters

Per ANSI Z21.80, lock-up is defined as an outlet pressure not more than 150 % or 5 in. W.C, whichever is greater, above the setpoint after a downstream safety shutoff valve closes with 2 seconds, and the two following conditions exists:

1. outlet pressure is set to the highest set point of the spring, and
2. the regulator is set to maximum capacity or flow at which the regulator will control lockup pressure within the acceptable limits.

This means that in a given application, a lock-up greater than 150 % or 5 in. W.C could occur, depending out the inlet pressure, the outlet pressure of the regulator, the flow rate of the regulator, closing time of safety shutoff valves, and the pipe volume downstream the regulator and upstream the safety shutoff valve.

Per DUNGS & EN 88, lock-up is +30 % of the outlet pressure setting after downstream shutoff valve slowly closes within 30 seconds. Therefore, in a given application, a lockup greater than +30 % or 5 in. W.C could occur, depending out the inlet pressure, the outlet pressure of the regulator, the flow rate of the regulator, closing time of safety shutoff valves, and the pipe volume downstream the regulator and upstream the safety shutoff valve.

Lock-up Pressure Spike

If in a given application the lock-up pressure is too high, upon system shutdown, employing one or more of the following should reduce the lock-up pressure:

1. Increase the size of the regulator.
2. For standard applications, increase the pipe volume downstream the regulator and upstream the safety shutoff valve. For a commercial appliance using a combination valve with a zero governor, installing the FRS within 1-2 feet of the appliance will help minimize the lock-up pressure.
3. Decrease the inlet pressure.
4. Decrease the oulet pressure.
5. Reduce the flow rate.
6. Disconnect vent line, if installed.
7. Use the external impulse option (see page 7). This will typically reduce the lock-up pressure by 10 %.
8. Install a token relief valve.

Lock-up Pressure Creep

If the lock-up pressure slowly increases over time, the regulating disc is dirty or damaged or the regulator is defective. In most cases to correct this condition, the regulator must be replaced.

Mounting Preparation

Mounting Preparation FRS 7../6 & FRS 5... Flanged

- The main gas supply must be shut off before starting the installation.
- Carefully examine the unit for shipping damage.
- Remove all dirt and debris before installing.
- Failure to remove dirt/debris could result in damage or improper performance.

Recommended Mounting Procedure

Regulator dome from vertically upright to horizontal

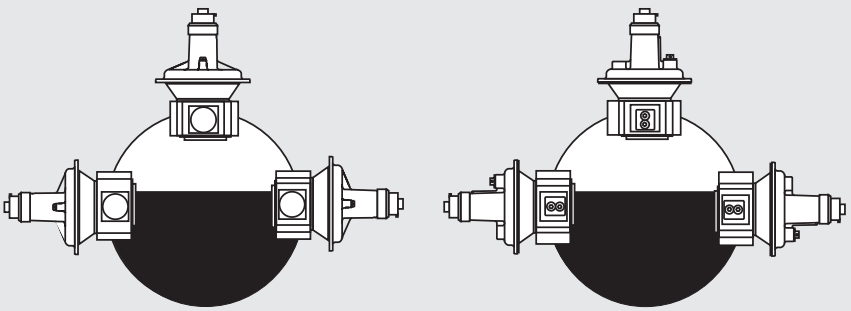

If the flow is not in the same direction of the arrows, the regulator will not operate properly.

Mounting & Installation

Procedure to Mount the FRS 7../6

- Install the FRS.../6 with the gas flow matching the direction indicated by the arrows on the casting.
- Mount the FRS.../6 with the regulator dome vertical or horizontal.
- Use new, properly reamed and NPT threaded pipe free of chips.
- Apply good quality pipe sealant, putting a moderate amount on the male threads only. If using LP gas, use pipe sealant rated for use with LP gas.
- Do not thread pipe too far. FRS.../6 distortion and/or malfunction may result from excess pipe in the valve body.
- Apply counterpressure with a parallel jaw wrench only to the flats of the FRS.../6 when installing pipe.
- Do not overtighten the pipe. Follow the maximum torque values listed.
- After installation is complete, perform a leak test using a soapy water solution.

⚠ Quickly opening the inlet manual shutoff valve can permanently rupture the internal, balancing diaphragm.

- Install the FRS 5... with the gas flow matching the direction indicated by the arrows on the casting.
- Mount the FRS 5... with the regulator dome vertical or horizontal.
- Insert seal inbetween flanges.
- Insert bolts, tighten in a star pattern to ensure uniform tightness.
- Do not overtighten bolts. Follow the maximum torque values listed.
- After installation is complete, perform a leak test using a soapy water solution.

FRS 7../6 Threaded Series

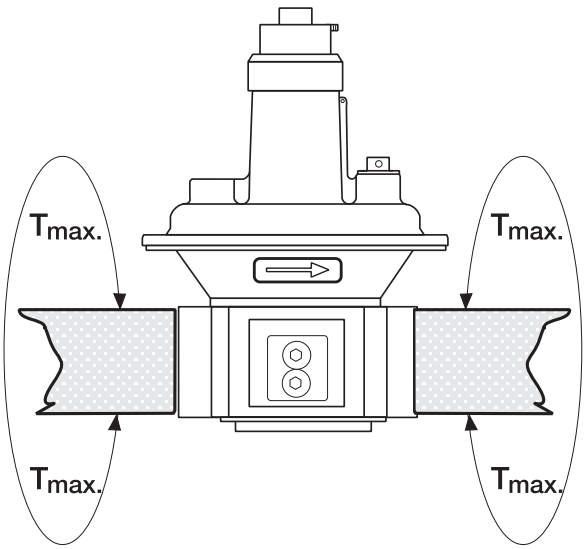

NPT pipe	½”	¾”	1”	1¼”	1½”	2”	2½”	3”
T_{max} [lb-in]	443	560	750	875	940	1190	1310	1310

⚠ Do not overtorque threaded connection or bolts. Permanent damage will occur.

FRS 5... Flanged Series

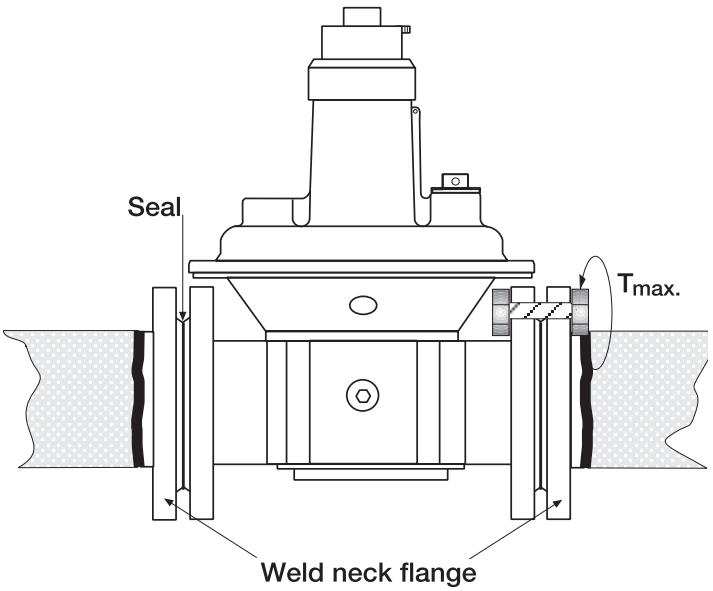

Bolts: as per DIN 939

T_{max} [lb-in] 443

NOTE: There are no limits for required pipe lengths immediately downstream of the FRS.

⚠ If the flow is not in the same direction as the arrows, the FRS will not operate properly.

Pressure Tap Connections

Pressure Taps - FRS 7../6 Threaded Version

1 Vent/breather connection
FRS 705/6 - FRS 710/6, G 1/4 in.
FRS 712/6 - FRS 730/6, G 1/2 in.

2 External impulse connection
FRS 705/6 - FRS 710/6, G 1/4 in. - one side.
FRS 712/6 - FRS 730/6, G 1/4 in. - both sides.

3 Upstream pressure connection
FRS 705/6 - FRS 710/6, 1/4 in. NPT - one side.
FRS 705/6 - FRS 710/6, G 1/4 in. - one side.
FRS 712/6 - FRS 730/6, 1/4 in. NPT - both sides.

4 Downstream pressure connection
FRS 705/6 - FRS 710/6, 1/4 in. NPT - one side.
FRS 712/6 - FRS 730/6 1/4 in. NPT - both sides.

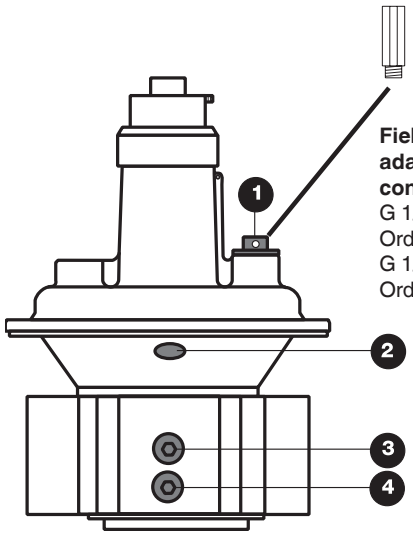

Field mountable adapter for vent connection
G 1/4 to 1/4“ NPT
Order No. 231944
G 1/2 to 1/2“ NPT
Order No. 231945

Pressure Taps - FRS 5... Flanged Version

FRS Flanged
1 Vent/breather connection
FRS 5040 - FRS 5150, G 1/2 in.

2 External impulse connection
FRS 5040 - FRS 5150, both sides G 1/4 in.
See caution below.

3 Upstream pressure connection
FRS 5040 - FRS 5150, both sides G 1/4 in.

4 Downstream pressure connection
FRS 5100 - 5125, both sides G 1/4 in.

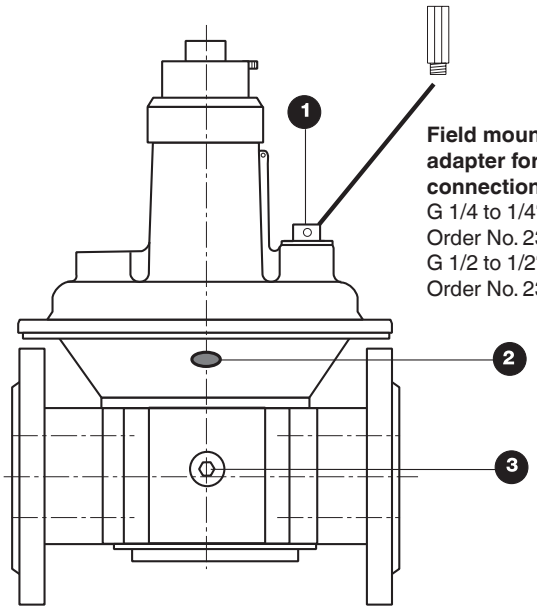

Field mountable adapter for vent connection
G 1/4 to 1/4“ NPT
Order No. 231944
G 1/2 to 1/2“ NPT
Order No. 231945

When using external impulse connection, the internal impulse tube must be sealed with RTV.

Regulator Orifice Diameters

Regulator Type	Orifice Diameter (mm)
FRS 705/6	28.0
FRS 707/6	34.0
FRS 710/6	39.0
FRS 712/6	43.5
FRS 715/6	43.5
FRS 720/6	57.5
FRS 725/6	68.0

Outlet Pressure Spring Selection

Outlet Pressure Spring Selection (outlet pressure values are for horizontal pipe mounting)
The output pressure is controlled by the force of the adjustable spring. The pressure regulator is supplied with the blue spring No. 4. By exchanging springs, other output pressures can be attained. Subtract 1"W.C. when mounted vertically.

Spring # **Spring Range (W.C.)** **Spring color**	Spring 1 1 to 3.6 brown Not CSA	Spring 2 2 to 5 white	Spring 3 2.8 to 8 orange	Spring 4 4 to a12 blue Standard	Spring 5 10 to 22 red	Spring 6 12 to 28 yellow	Spring 7 24 to 40 black	Spring 8 40 to 60 pink	Spring 9 60 to 80 grey Not CSA
FRS 705/6	229817	229818	229820	229821	229822	229823	229824	229825	229826
FRS 707/6	229833	229834	229835	229836	229837	229838	229839	229840	229841
FRS 710/6	229842	229843	229844	229845	229846	229847	229848	229849	229850
FRS 712/6, 715/6, 5040	229851	229852	229853	229854	229869	229870	229871	229872	229873
FRS 720/6 & 5050	229874	229875	229876	229877	229878	229879	229880	229881	229882
FRS 725/6, 730/6, 5065, 5080	229883	229884	229885	229886	229887	229888	229889	229890	229891
FRS 5100	229892	229893	229894	229895	229896	229897	229898	229899	229900
FRS 5125	229901	229902	229903	229904	229905	229906	229907	229908	243416
FRS 5150	229909	229910	229911	229912		229914	229915	229916	243417

Breather Plug

- All FRS's have a breather plug that threads into the regulators's vent connection.

⚠ Do not removed plastic breather plug unless venting outdoors is required.

This plug is not the vent limiter, and it prevents debris from entering the upper chamber of the regulator. Debris in the upper chamber of the regulator could adversly affect regulator performance.

- The FRS regulator must also be able to exchange air through the breather hole in order to properly regulate. Do not plug the breather hole. Clear out if necessary.

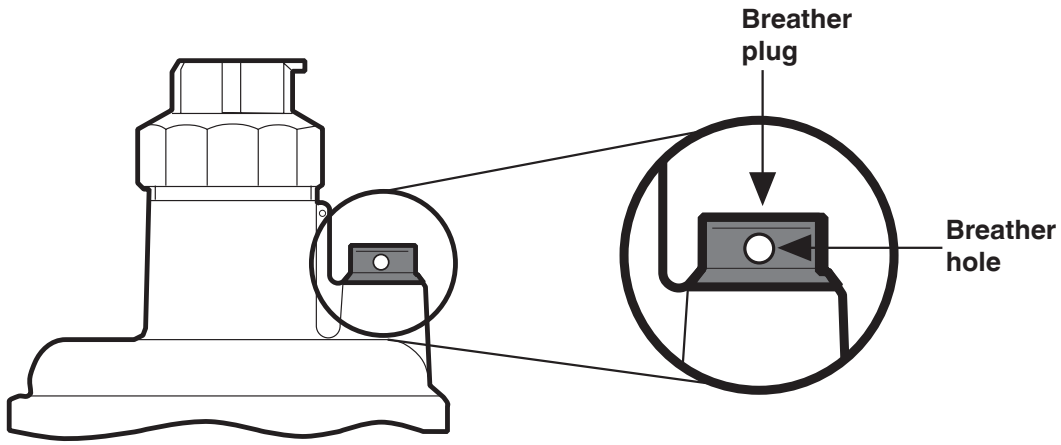

External Impulse

- When it is desirable to use the external impluse as the feedback for the regulator, the internal impluse must be plugged. Seal the interal impulse connection with a silicone or RTV sealant suitable for exposure to natural gas, propane, or butane.
- The external impulse must be properly terminated and made of a durable, metal material that is suitable for gas service.

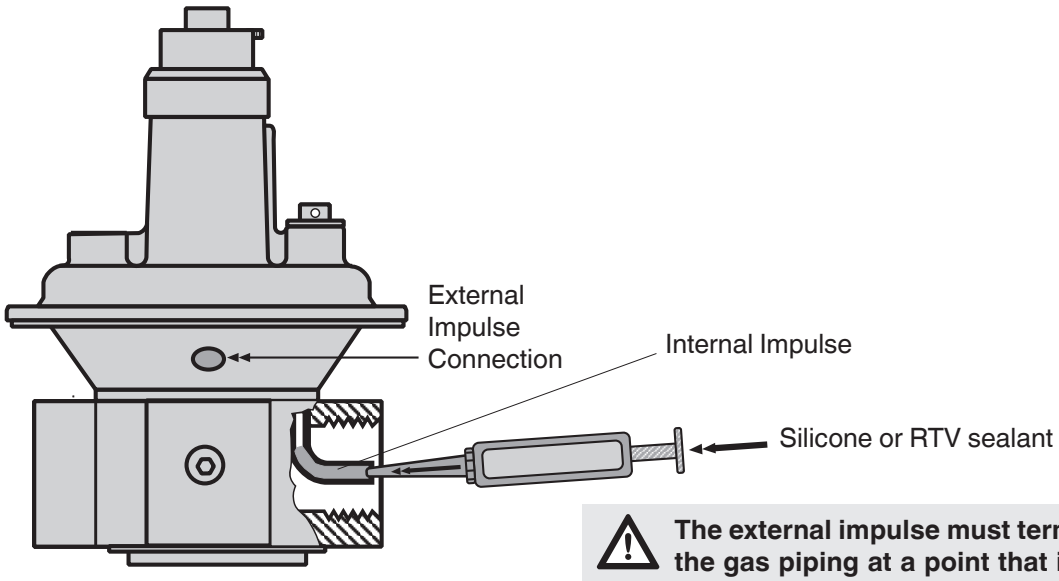

⚠ The external impulse must terminate back into the gas piping at a point that is upstream two safety shutoff valves in series.

Vent Limiting Device, Backloading & Venting

Vent Limiting Device

The FRS/6 series regulator contains an internal, factory installed vent limiting device, which limits the escape of gas to less than 0.5 CFH @ 5 PSI in case atmospheric diaphragm ruptures. Venting required unless accepted by the authority having jurisdiction.

Backloading Requirements

If the vent line connection is backloaded with an air pressure, the air pressure may be 7 PSI/500 mbar maximum without damaging the FRS or causing adverse outlet pressure conditions.

Vent Line Requirements

It is highly recommended that the internal vent limiter of the FRS be relied upon rather than venting the FRS, especially if the vent line is greater than 15 ft. An atmospheric vent line (aka 'vent line') from a regulator can adversely affecting the performance (lockup, response time, repeatability, hysteresis, etc) of the regulator, which can result in damage to the downstream appliance (e.g. combustion chamber), excessive CO, hard light-offs, or nuisance shutdowns. If venting is required regardless of these issues, then the vent line from a regulator should be installed in accordance with the local code for vent sizing and termination requirements. In the absence of local codes, follow National Fuel Gas Code NFPA 54, the International Fuel Gas Code or the CSA B149.1 installation code for venting requirements in combination with the requirements in section Vent Line Installation.

Connecting the vent line to the FRS

- If venting the regulator, the vent line is to be connected to the upper dome of the FRS regulator as illustrated.
- Remove the beather plug.
- The vent connecton is G 1/4 for FRS 705/6 to FRS 710/6 and G 1/2 for FRS 712/6 to FRS 730/6 and for all ISO flanged regulators. G 1/4 to 1/4"NPT adapters are available: (Order No. 231944) and G 1/2 to 1/2 NPT (Order No. 231945).

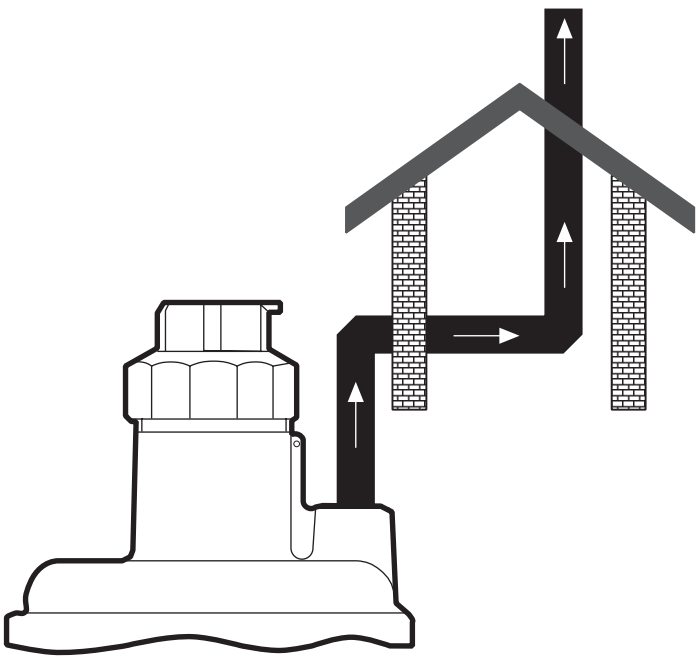

⚠ In the absence of venting codes and where venting is required, each regulator must be vented separately from all other vents.

Vent Line Installation

Requirements for Vent Line Installation

1. Do not use excessive fittings or long pipe runs. With runs longer than 15 ft, increasing the pipe size can increase stack effect (movement of air through the vent line) and can reduce air friction to improve breathability of the regulator.
2. Elbows significantly reduce stack effect. Keep elbows to an absolute minimum, and when a 90 deg needs to be made, do as follows:
   - If using rigid pipe, use long radius elbows (not short). Long radius elbows have a bending radius of 1.5 times the pipe diameter. Short elbows have a bending radius of 1 times the pipe diameter.
   - If using tubing and permitted by code, use a minimum bending radius of 2 x the vent line outside diameter.
3. Do not reduce along the entire run of the vent line the pipe size that is established at the regulator's threaded vent connection.
4. Do not apply a bending moment on the vent line, if rigid pipe is used. This can apply a large bending force (a severe stress) to the vent connection of the regulator and damage the housing, which will bypass of the vent line.
5. Apply proper pipe hangers and supports so that the vent line does not load or strain due to the regulator vent line connection.
6. Do not combine or connect other vents from other devices.

Requirements for Vent Line Length and Size for a maximum 15ft run

For ¼ vent line connection
- Use schedule 40, ¼" pipe or minimum 9mm OD tubing.

For regulator main inlet pipe connections up to 1" and with ½" vent line connection
- Use schedule 40, 3/8" pipe or minimum 12mm OD tubing

For regulator main inlet pipe connections greater than 1" and with ½" vent line connection
- Use schedule 40, ½" pipe or minimum 15mm OD tubing

Additional Requirements for Vent Line Length and Pipe Size for runs beyond 15ft

For regulator main inlet pipe connections up to 1" and with ¼ vent line connection
- The same as above applies, and then after a length of 15 ft: schedule 40, 3/8" pipe or minimum 12m OD tubing.
- After additional 10ft, increase pipe to schedule 40, ½" pipe or minimum 15mm OD tubing.

For regulator main inlet pipe connections up to 1" and with ½" vent line connection
- The same as above applies, and then after a length of 15 ft: ½" pipe or minimum 15mm OD tubing
- After additional 10ft, increase pipe to schedule 40, 3/4" pipe or minimum 20mm OD tubing.

For regulator main inlet pipe connections greater than 1" and with ½" vent line connection
- The same as above applies, and then after a length of 15 ft: schedule 40, 3/4" pipe or minimum 20mm OD tubing.
- After additional 10ft, increase pipe to schedule 40, 1" pipe or minimum 26mm OD tubing

Requirements for the Vent Line's Point of Termination

1. If a vent line runs through a roof, verify that the vent line terminates above the point where water due to heavy rains and snow accumulate on the roof do not cover or isolate the termination point from the atmosphere.
2. To limit the consequences of rain or debris getting into the vent, always turn the outlet of the vent down towards the ground (goose necked).
3. Bugs Screen
   - Bugs are attracted to the smell of the natural/LP gas odorant and will nest in the vent line, which will further reduce stack effect or will completely seal the termination point. Install a bug screen on the termination point to deter insects from nesting in the line.
   - Do not paint the bug screen.
4. Points of Discharge
   - The vent line must discharge away from where people might walk or work, such as pedestrians, roofers and other maintenance professionals.
   - The vent line must discharge away from fresh air intakes and from windows. See applicable fuel gas installation codes (e.g. CSA B149.1, NFPA 54, or the International Fuel Gas Code) for acceptable clearances.

Outlet Pressure Adjustment

Adjusting the FRS outlet pressure

1. Verify that the intended output pressure is within the spring range that is installed in the regulator by comparing the colored outlet pressure label with the table on page 6.
2. Remove the black cover.
3. To increase outlet pressure, turn the adjustment spindle clockwise. To decrease the outlet pressure, turn the adjustment spindle counterclockwise.
4. Always use an accurate pressure gauge connected downstream of the regulator to measure the actual outlet pressure as the FRS is mounted in the operating position.
5. Reinstall the black adjustment cover.
6. To prevent unauthorized adjustment, holes in the black cover and the side of the regulator can be used to secure a lead seal.

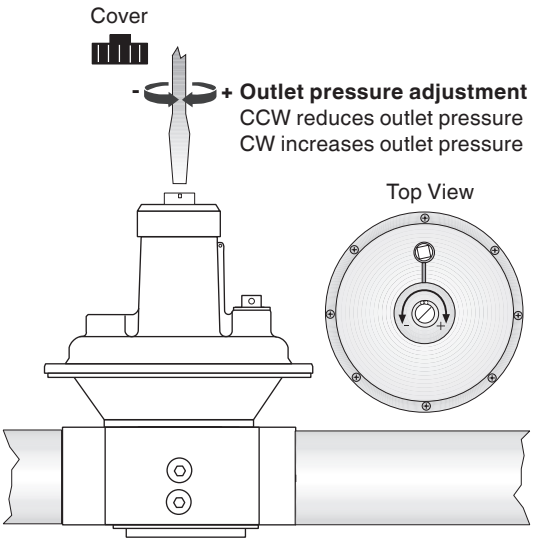

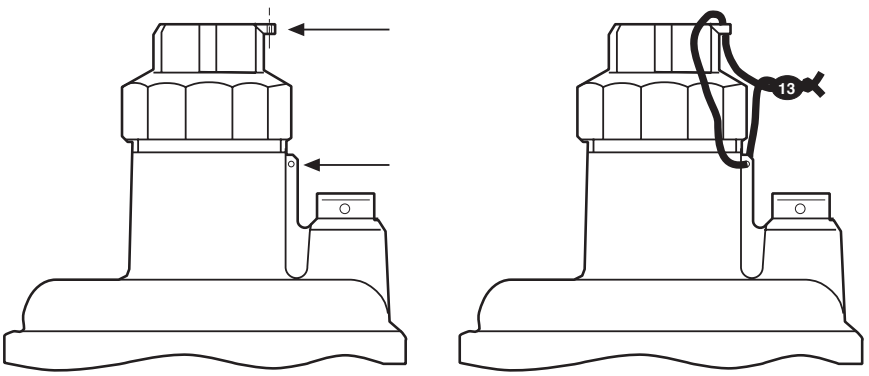

Spring Replacement

- Remove the adjustment cover.
- Completely release the spring tension by turning the adjustment spindle completely counterclockwise with a screwdriver, and remove the aluminum cap.
- Remove existing spring and insert new spring.
- Re-install the adjusment cover, and apply the new outlet pressure label provided with new outlet pressure range onto the name plate.
- Reinstall the adjustment cover.



Never have your head above or near the aluminum cap when removing regulator spring. The spring tension can be high enough to rapidly eject the aluminum cap with a large force.

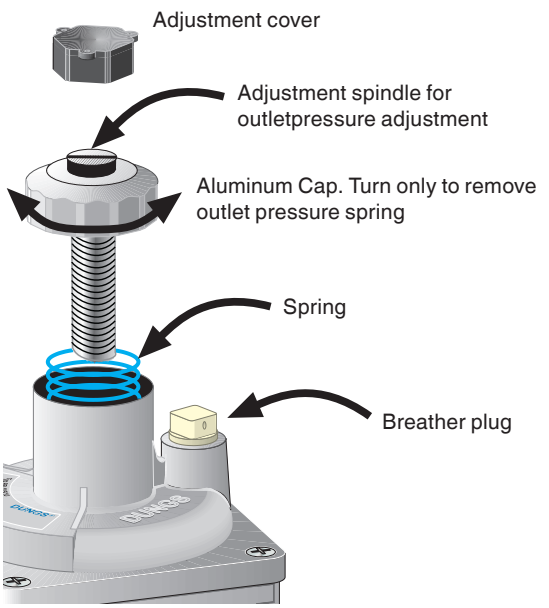

Flow Curve

Flow Curve (mechanically open) Using Natural Gas.

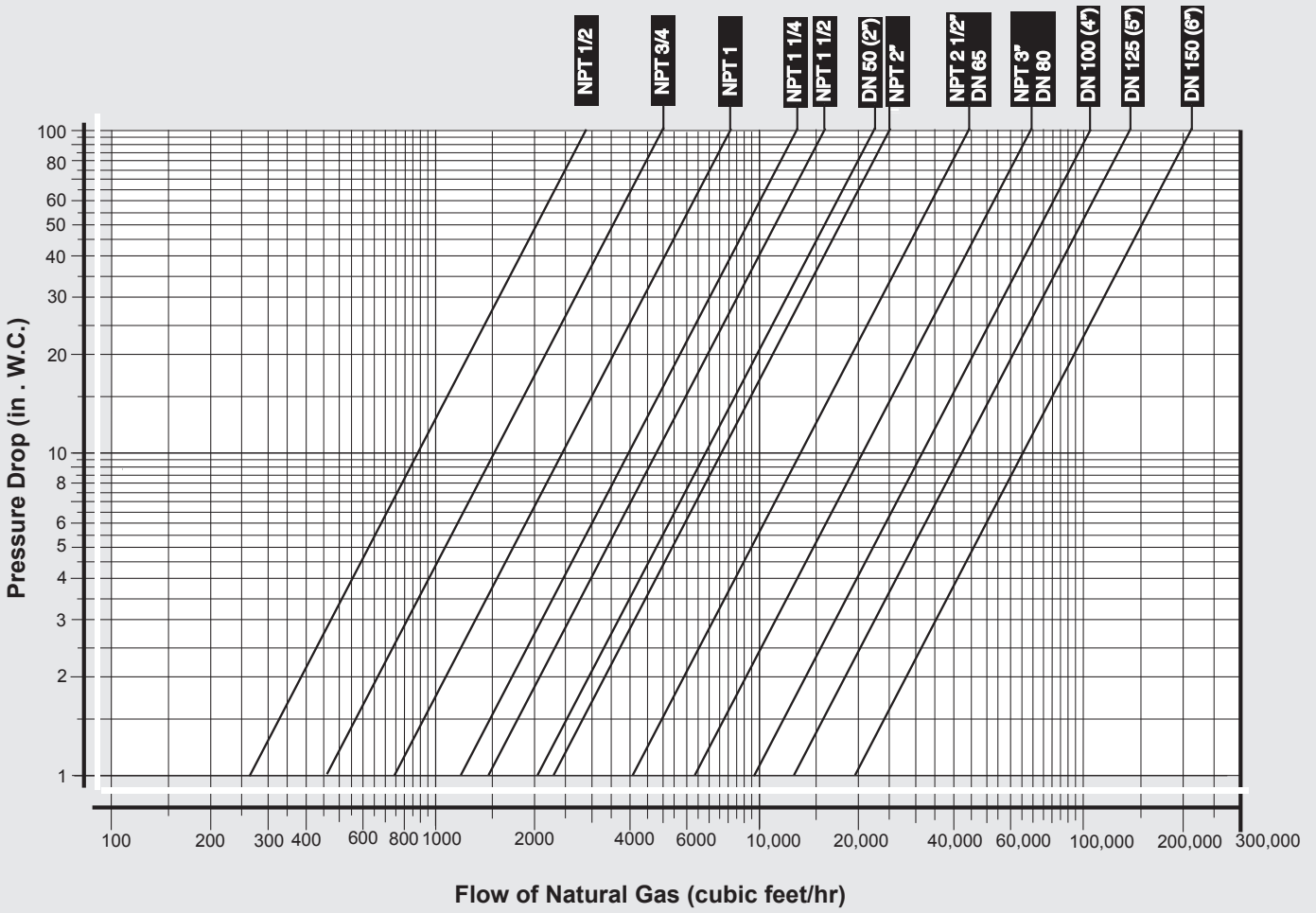

Sizing an FRS for an application

1) Based on desired maximum flow rate, intersect the FRS flow curve and determine corresponding pressure drop.
2) Select a spring in the table on page 6 that fits within the desired outlet pressure for the application.
3) Add the desired outlet pressure to the pressure drop determined in step one above. The sum of these is the required minimum inlet pressure to achieve the desired maximum flow rate.

Example of sizing an FRS for an application

1) Desired maximum flow rate = 2,000 CHF and desired outlet pressure = 12"WC
2) From table on page 6, either the blue, red or yellow spring will work, because 12" of W.C. is within the range of these springs.
3) 2000 CFH intersects the following curves and corresponding flow rates
   FRS 707 = 16" of W.C. drop
   FRS 710 = 6.5" of W.C. drop
   FRS 712 = 2.7" of W.C. drop
   FRS 715 = 1.8 " of W.C. drop
   Adding 12" to these values gives the following minimum inlet pressures required to achieve the flow rate up to 2000 CFH with 12" of W.C. outlet pressure.
   FRS 707 requires minimum inlet pressure of 28" (16" + 12") of W.C.
   FRS 710 requires minimum inlet pressure of 18.5" (6.5" + 12") of W.C.
   FRS 712 requires minimum inlet pressure of 14.7" (2.7" + 12") of W.C.
   FRS 715 requires minimum inlet pressure of 13.8" (1.8" + 12") of W.C.

Maintenance & Testing

The regulator shall be annually tested for proper performance and leakage as follows:

- Verify there is no external leakage out the vent, at the inlet and outlet connections, and where there are o-ring seals. Apply a leak detection solution to these areas. The presence of bubbles indicates an leak. If the leakage can not be sealed, the regulator must be replaced.
- Verify the regulated pressure is in accordance with the requirements of the downstream appliance/burner. If the outlet pressure is either too high or too low, adjust the regulator to get a proper regulated pressure. If the proper regulater pressure can not be achieved, replace the regulator.
- If vented, remove the adjustment spindle and inspect the inside of the upper dome for debris. Signs of water or other materials indicate improper venting that needs to be corrected.
- Verify that the lock-up pressure does not exceed the requirements for the downstream appliance/burner. If the lock-up pressure is too high, employ one of the methods describe in section Lock-up Pressure Parameters or replace the regulator.

Accessories & Replacement

FRS Flange Accessories

Body Size	Flange Description	# of Holes per Flange	Flange Order No.	Bolt size	**Bolt Order No.	***Gasket Order No.
FRS 5040	1 1/2“ ISO Flanged	4	227137	M16x55	135940	267463
FRS 5050	2“ ISO Flanged	4	227138	M16x65	135930	267464
FRS 5065	2 1/2“ ISO Flanged	4	227139	M16x65	135930	267464
FRS 5065	2 1/2“ ISO to NPT	4	243690	M16x65	135930	267464
FRS 5080	3“ ISO Flanged	8	227140	M16x65	135930	267466
FRS 5080	3“ ISO to NPT	8	243219	M16x65	135930	267466
FRS 5100	4“ ISO Flanged	8	227141	M16x65	135930	267467
FRS 5125	5“ ISO Flanged	8	227142	M16x75	148830	267468
FRS 5150	6“ ISO Flanged	8	227143	M20x80	135950	030403

* When a control is used alone, one mating flange is needed for each end, for a total of two flanges. When one control is bolted to another, such as an FRS to a DMV dual modular safety valve, one mating flange is needed for each end, for a total of two flanges.
** Includes one bolt, one lock washer, and one nut.
*** One seal needed for each flange.

Repair Kits

Repair Kit (contains all internal hardware to rebuild regulator)	Order No.
FRS 705/6	Not available
FRS 707/6	Not available
FRS 710/6	Not available
FRS 712/6, 715/6 & 5040	068924
FRS 720/6 & 5050	068932

Repair Kit (contains all internal hardware to rebuild regulator)	Order No.
FRS 725/6 & 5065	068940
FRS 5080 & 730/6	091868
FRS 5100	091876
FRS 5125	069005
FRS 5150	069013

We reserve the right to make modifications in the course of technical development.

Karl Dungs, Inc.
3890 Pheasant Ridge Drive NE
Suite 150
Blaine, MN 55449, U.S.A.
Phone 763 582-1700
Fax 763 582-1799
e-mail info@karldungsusa.com
Internet http://www.dungs.com/usa/

Karl Dungs GmbH & Co. KG
P.O. Box 12 29
D-73602 Schorndorf, Germany
Phone +49 (0)7181-804-0
Fax +49 (0)7181-804-166
e-mail info@dungs.com
Internet http://www.dungs.com