GB

DUNGS®
Combustion Controls

Instruction Manual

SAV 100025-100050 / SAV 10010-10020
SAV 250025-250050 / SAV 25010-25020

1. Target group

The target group of this manual is qualified personnel of the gas safety and regulating technology. Due to their specialist training, knowledge and experience, they should be capable of evaluating the work assigned to them and recognising possible dangers. Only they are permitted to carry out assembly, commissioning, settings and maintenance on the devices in compliance with the recognised rules for occupational safety.



Hang this instruction manual in a readily visible place inside the installation room! Do not carry out any work until you have read the safety instructions of this instruction manual and are qualified to do so.

2. Warnings

2.1 General warnings



The recognised occupational safety rules and accident prevention regulations must be observed and, if necessary, personal protective measures must be taken.



All adjustments and settings should only be performed in accordance with the instruction manuals of the connected machines.

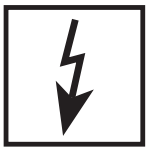

Never carry out work as long as gas pressure or voltage is applied. Avoid open fire. Please observe public regulations.



Prior to assembly, the device must be inspected for transport damage.



The device must not be exposed to open fire. Protection against lightning strikes must be guaranteed.



Connected line systems must be free from dirt and contamination.



Protection from environmental impacts and weather conditions (corrosion, rain, snow, icing, humidity (e.g. by condensation), mould, UV radiation, harmful insects, poisonous, corrosive solutions/ liquids (e.g. cutting and cooling fluids), must be guaranteed. Depending on the installation site, it may be necessary to take protective measures.



The device may only be operated in compliance with the operating conditions stated on the type plate.



The device must be protected from vibrations and mechanical impacts.



The device must not be used in areas with increased seismic risk.

Explanation of the symbols		
1, 2, 3,...	=	Order of action
•	=	Instruction

MC • Edition 2022.08 • No. 276 524 Rev. -0

2.2 Designated use

The device is used in accordance with its designated use if the following instructions are observed:

- Use of the device in gas transport and gas distribution networks, commercial and industrial plants.
- Use in pressure regulator stations according to EN 12186 and EN 12279.
- Use with gases of the 1st and 2nd gas families according to EN 437 only.
- Use with dry and clean gases only, no aggressive media.
- Use only in compliance with the operating conditions stated on the type plate.
- Use in perfect condition only.
- Malfunctions and faults must be eliminated immediately.
- Use only in observance of the instructions given in this instruction manual and of national regulations.

2.3 Risks in case of misuse

- If used in accordance with their designated use, the devices are safe to operate.
- Non-observance of the regulations may result in personal injury or material damage, financial damage or environmental damage.
- Operator errors or misuse present risks to life and limb of the operators and also to the device and other material property.

3. EU Declaration of conformity

Produkt / Product Produit / Producto	**SAV 100025-100050 / SAV 10010-10020 SAV 250025-250050 / SAV 25010-25020**	**Safety Shut-off Valve up tp 25 bar**	
Hersteller / Manufacturer Fabricant / El Fabricante	**Karl Dungs GmbH & Co. KG Karl-Dungs-Platz 1 73660 Urbach, Germany**		
bescheinigt hiermit, dass die in dieser Übersicht genannten Produkte einer **EU-Baumusterprüfung (Baumuster)** unterzogen wurden und die wesentlichen Sicherheitsanforderungen der: • **EU-Druckgeräterichtlinie 2014/68/EU** in der gültigen Fassung erfüllen. Bei einer von uns nicht freigegebenen Änderung des Gerätes verliert diese Erklärung ihre Gültigkeit. Der oben beschriebene Gegenstand der Erklärung entspricht den einschlägigen Harmonisierungsrechtsvorschriften der Union. Die alleinige Verantwortung für die Ausstellung dieser Konformitätserklärung trägt der Hersteller.	certifies herewith that the products named in this overview were subjected to an **EU-Type Examination (production type)** and meet the essential safety requirements: • **EU-Pressure Equipment Directive "2014/68/EU"** as amended. In the event of an alteration of the equipment not approved by us this declaration loses its validity. The object of the declaration described above conforms with the relevant Union harmonisation legislation. This declaration of conformity is issued under the sole responsibility of the manufacturer.	certifie par la présente que le produit mentionné dans cette vue d'ensemble a été soumis à **un examen UE de type (type de fabrication)** et qu'il est conforme aux exigences en matières de sécurité des dernières versions en vigueur de : • **Directive européenne relative aux appareils sous pression 2014/68/UE** Ce communiqué n'est plus valable si nous effectuons une modification libre de l'appareil. L'objet décrit ci-dessus de la présente déclaration correspond aux prescriptions légales applicables en matière d'harmonisation de l'Union. Le fabricant porte l'entière responsabilité pour l'établissement de la présente déclaration de conformité.	certifica que los productos mencionados en este resumen han sido sometidos a un **examen UE de tipo (tipo de producción)** y cumplen con los requisitos mínimos de seguridad de: • **Directiva de equipos a presión de la UE 2014/68/UE** en su versión vigente. En caso de una modificación no autorizada por nosotros, esta declaración pierde su validez. El objeto de la declaración descrita anteriormente es conforme a la legislación de armonización pertinente de la Unión. El fabricante es el único responsable de la expedición de esta declaración de conformidad.
Prüfgrundlage der EU-Baumusterprüfung (Baumuster) Specified requirements of the EU-Type Examination (production type) Base d'essai de l'examen UE de type (type de fabrication) Requisitos específicos del examen UE de tipo (tipo de producción))		**DIN EN 14382**	
Gültigkeitsdauer/Bescheinigung Term of validity/attestation Validité/certificat Periodo de validez / Certificado		**2024-08-05 CE-0085CP0255**	
Notifizierte Stelle (EU Baumusterprüfung: Modul B) Notified Body (EU type-examination: Module B) Organisme notifié (Examen de type de l'UE: module B) Organismo notificado (Examen tipo UE: Módulo B)		**DVGW CERT GmbH** Josef-Wirmer-Straße 1-3 D-53123 Bonn, Germany Notified Body number: 0085	
Überwachung des QM-Systems (Modul D) Monitoring of the QM system (module D) Contrôle de la gestion de l'assurance qualité (module D) Supervisión del sistema de calidad y seguridad módulo D)		**TÜV SÜD Industrie Service GmbH** Westendstraße 199 D-80686 München, Germany Notified Body number: 0036	
B. Sc., MBA, Simon P. Dungs Geschäftsführer / Chief Operating Officer Directeur / Gerente Urbach, 2022-08-01			

UK CA

DUNGS®
Combustion Controls

3. Declaration of conformity

Product	**SAV 100025-100050 / SAV 10010-10020 SAV 250025-250050 / SAV 25010-25020**	**Safety Shut-off Valve up tp 25 bar**
Manufacturer	**Karl Dungs GmbH & Co. KG · Karl-Dungs-Platz 1 · D-73660 Urbach/Germany**	

Certifies herewith that the products named in this overview were subjected to a **Type Examination (production type)** and meet the essential safety requirements:

- **The Pressure Equipment Safety Regulations, UKSI 2016:1105 (as amended by UKSI 2019: 969)**

In the event of an alteration of the equipment not approved by us this declaration loses its validity.
The object of the declaration described above conforms with the relevant legislation.
This declaration of conformity is issued under the sole responsibility of the manufacturer.

Specified requirements of the Type Examination (production type)	**DIN EN 14382**
Term of validity	**2032-05-17**
Approved Body	**2016 No. 1105** **TUV SUD BABT Unlimited** Octagon House, Concorde Way, Segensworth North, Fareham, Hampshire, PO15 5RL, United Kingdom Approved Body Number: 0168
Monitoring of the QA system	Conformity process adopted: Module B+D
B.Sc., MBA Simon P. Dungs, Chief Operating Officer Urbach, 2022-08-01	

4. Table of contents

1. Target group **1**
2. Warnings **1**
2.1 General warnings 1
2.2 Designated use 2
2.3 Risks in case of misuse 2
3. Declaration of conformity **3**
4. Table of contents **5**
5. List of abbreviations **6**
6. Features **7**
6.1 Technical data 7
6.2 Nomenclature 8
6.3 Adjustment ranges 9
6.4 Selection of springs 10
6.5 Type plate 11
7. Function **12**
8. Dimensions **13**
8.1 Dimensions SAV flanged 13
8.2 Dimensions SAV threaded 14
9. Installation **15**
9.1 General information 15
9.2 Installation instructions 16
9.3 Torques 17
10. Setting overpressure/underpressure **18**
10.1 Recommended set values 18
10.2 Spring replacement 19
10.2.1 Spring replacement W_{dso} 19
10.2.2 Spring replacement W_{dsu} 20
11. Commissioning and Decommissioning **22**
11.1 General information 22
11.2 Leakage test 22
11.3 Commissioning / unlocking / venting 23
11.4 Pressure compensation 24
11.5 Checking the setting 25
11.6 Recommissioning 26
11.7 Decommissioning 26
12. Faults 26
13. Maintenance **27**
13.1 General information 27
13.2 Maintenance instructions 28
13.2.1 Preparation 28
13.2.2 Removing the ASE from the housing 28
13.2.3 Checking/replacing the valve seat 29
13.2.4 Mounting the ASE on the housing 31
13.3 Required tools 32
13.4 Leakage test 33
13.5 Recommended maintenance intervals 33
14. Spare parts **34**
14.1 List of spare parts 34
14.2 Storage conditions **35**
15. Flow diagram **36**

5. List of abbreviations

Abbreviation	Description
AG_o	Response pressure group of the upper response pressure
AG_u	Response pressure group of the lower response pressure
ASE	Safety shut-off valve (without housing)
K_G	Flow volume coefficient
DN	Nominal diameter
IS/DS	Integral or differential strenght type
Class A	Functional class: in case the comparison membrane is damaged or in the event of a breakdown of the auxiliary power supply, the SAV will close
p_d	Regulator outlet pressure
p_{do}	Upper response pressure
p_{du}	Lower response pressure
p_{max}	Maximum operating pressure
PN	Nominal pressure of the flanges
PS	Maximum admissible pressure
SAV	Safety shut-off valve
SBV	Safety relief valve
SN	Serial number
SW	Wrench size
W_{do}	Adjustment range for the upper response pressure by using the available adjusting springs
W_{du}	Adjustment range for the lower response pressure by using the available adjusting springs
W_{dso}	Specific adjustment range of the adjusting spring installed for the upper response pressure
W_{dsu}	Specific adjustment range of the adjusting spring installed for the lower response pressure

6. Features

6.1. Technical data

<table>
<tr><th>Technical data</th><th>SAV …</th></tr>
<tr><td>Device</td><td>Safety shut-off valve according to EN 14382, class A</td></tr>
<tr><td>Type</td><td>SAV 100... IS / SAV 250... DS</td></tr>
<tr><td>Response time</td><td>≤ 2s</td></tr>
<tr><td>Type of gas</td><td>Family 1+2+3</td></tr>
<tr><td>Nominal diameters

Flange</td><td>Connection flanges PN 25 according to EN 1092-1 or ANSI 150 lbs (B16.5)
<table>
<tr><td>DN</td><td>25</td><td>40</td><td>50</td></tr>
<tr><td>ANSI</td><td>1</td><td>1½</td><td>2</td></tr>
</table>
Connection thread BSP (ISO228/1) or NPT (B1.20.1)
<table>
<tr><td>G / NPT</td><td>1</td><td>1½</td><td>2</td></tr>
</table></td></tr>
<tr><td>Inlet pressure</td><td>SAV 100...10 bar (1 000 kPa)
SAV 250...25 bar (2 500 kPa)*</td></tr>
<tr><td>Lower adjustment range W_{du}</td><td>10 mbar to 3 000mbar</td></tr>
<tr><td>Upper adjustment range $W_{do:}$</td><td>40 mbar to 5 000 mbar</td></tr>
<tr><td>Materials</td><td>Main body housing: cast iron GGG 50 (GJS 400-18 on request)
Diaphragm housing: Aluminium (steel on request)
Diaphragms: NBR</td></tr>
<tr><td>Ambient temperature</td><td>-20 °C to + 60 °C</td></tr>
</table>

* 19 bar (1 900 kPa) with ANSI 150 flanges

6.2 Nomenclature

Example SAV 100025 ND	SAV		100	025	ND	ANSI
Type	**Safety shut-off valve**					
MOP	100 …	**10 000 mbar (1 000 kPa)**				
	250 …	**25 000 mbar (2 500 kPa)**				
Nominal diameter	10	1”				
	15	1½”				
	20	2”				
	025	DN 25				
	040	DN 40				
	050	DN 50				
Pressure ranges	ND	Low pressure				
	MD	Medium pressure				
	UHD	Ultra high pressure				
Thread / flange type		with Standard PN-25				
	ANSI	with ANSI 150 lbs				
	NPT	with NPT threads				

6.3 Adjustment ranges

Type	Connection	Version	Order number	Lower switching point		Upper switching point	
				W_{du}	AG	W_{do}	AG
SAV 100025 ND	DN 25	ND	270290	10-115 mbar	AG 10	40-240 mbar	AG 10
SAV 100025 MD	DN 25	MD	270291	35-400 mbar	AG 10	180-800 mbar	AG 10
SAV 250025 UHD	DN 25	UHD	271122	150-3.000 mbar	AG 5	500-5.000 mbar	AG 5
SAV 100040 ND	DN 40	ND	270293	10-115 mbar	AG 10	40-240 mbar	AG 10
SAV 100040 MD	DN 40	MD	270294	35-400 mbar	AG 10	180-800 mbar	AG 10
SAV 250040 UHD	DN 40	UHD	271123	150-3.000 mbar	AG 5	500-5.000 mbar	AG 5
SAV 100050 ND	DN 50	ND	270296	10-115 mbar	AG 10	40-240 mbar	AG 10
SAV 100050 MD	DN 50	MD	270297	35-400 mbar	AG 10	180-800 mbar	AG 10
SAV 250050 UHD	DN 50	UHD	271124	150-3.000 mbar	AG 5	500-5.000 mbar	AG 5
SAV 100025 ND ANSI	1" ANSI150	ND	277797	10-115 mbar	AG 10	40-240 mbar	AG 10
SAV 100025 MD ANSI	1" ANSI150	MD	277799	35-400 mbar	AG 10	180-800 mbar	AG 10
SAV 250025 UHD ANSI	1" ANSI150	UHD	275186	150-3.000 mbar	AG 5	500-5.000 mbar	AG 5
SAV 100040 ND ANSI	1½" ANSI150	ND	277801	10-115 mbar	AG 10	40-240 mbar	AG 10
SAV 100040 MD ANSI	1½" ANSI150	MD	277802	35-400 mbar	AG 10	180-800 mbar	AG 10
SAV 250040 UHD ANSI	1½" ANSI150	UHD	275184	150-3.000 mbar	AG 5	500-5.000 mbar	AG 5
SAV 100050 ND ANSI	2" ANSI150	ND	277804	10-115 mbar	AG 10	40-240 mbar	AG 10
SAV 100050 MD ANSI	2" ANSI 150	MD	277805	35-400 mbar	AG 10	180-800 mbar	AG 10
SAV 250050 UHD ANSI	2" ANSI150	UHD	273855	150-3.000mbar	AG 5	500-5.000 mbar	AG 5

Type	Connection	Version	Order number	Lower switching point		Upper switching point	
				W_{du}	AG	W_{do}	AG
SAV 10010 ND	G 1"	ND	287907	10-115 mbar	AG 10	40-240 mbar	AG 10
SAV 10010 MD	G 1"	MD	287908	35-400 mbar	AG 10	180-800 mbar	AG 10
SAV 25010 UHD	G 1"	UHD	287909	150-3.000 mbar	AG 5	500-5.000 mbar	AG 5
SAV 10015 ND	G 1½"	ND	287910	10-115 mbar	AG 10	40-240 mbar	AG 10
SAV 10015 MD	G 1½"	MD	287911	35-400 mbar	AG 10	180-800 mbar	AG 10
SAV 25015 UHD	G 1½"	UHD	287912	150-3.000 mbar	AG 5	500-5.000 mbar	AG 5
SAV 10020 ND	G 2"	ND	287913	10-115 mbar	AG 10	40-240 mbar	AG 10
SAV 10020 MD	G 2"	MD	287914	35-400 mbar	AG 10	180-800 mbar	AG 10
SAV 25020 UHD	G 2"	UHD	287915	150-3.000 mbar	AG 5	500-5.000 mbar	AG 5
SAV 10010 ND NPT	NPT 1"	ND	287916	10-115 mbar	AG 10	40-240 mbar	AG 10
SAV 10010 MD NPT	NPT 1"	MD	287917	35-400 mbar	AG 10	180-800 mbar	AG 10
SAV 25010 UHD NPT	NPT 1"	UHD	287918	150-3.000 mbar	AG 5	500-5.000 mbar	AG 5
SAV 10015 ND NPT	NPT 1.1/2"	ND	287919	10-115 mbar	AG 10	40-240 mbar	AG 10
SAV 10015 MD NPT	NPT 1.1/2"	MD	287920	35-400 mbar	AG 10	180-800 mbar	AG 10
SAV 25015 UHD NPT	NPT 1.1/2"	UHD	287921	150-3.000 mbar	AG 5	500-5.000 mbar	AG 5
SAV 10020 ND NPT	NPT 2"	ND	287922	10-115 mbar	AG 10	40-240 mbar	AG 10
SAV 10020 MD NPT	NPT 2"	MD	287923	35-400 mbar	AG 10	180-800 mbar	AG 10
SAV 25020 UHD NPT	NPT 2"	UHD	287924	150-3.000 mbar	AG 5	500-5.000 mbar	AG 5

6.4 Selection of springs

Specific adjustment range, underpressure W_{dsu}							
Spring colour	Order number	Wire diameter [mm]	Length [mm]	Diameter [mm]	Setpoint range [mbar]		
					ND	MD	UHD
White	270353	1.2	60	10.0	10-32		
Yellow	270355	1.5	55	12.3	24-40		
Blue	270356	2.0	55	12.3	30-115	35-110	
Black	270357	2.3	55	12.3		50-250	
Purple	270358	2.5	55	12.3		80-400	150-500
Orange	270359	2.8	55	12.3			300-1000
Silver	270360	3.0	60	15.0			800-1400
Pink	276126	3.5	60	15.0			1200-3000

Specific adjustment range, overpressure W_{dso}							
Spring colour	Order number	Wire diameter [mm]	Length [mm]	Diameter [mm]	Setpoint range [mbar]		
					ND	MD	UHD
Silver	270361	2.2	60	30.0	40-130		
Green	270366	2.5	60	30.0	60-190		
Red	270367	2.7	60	30.0	90-240	180-290	
Yellow	270368	3.2	60	30.0		230-370	
Blue	270369	3.5	60	30.0		300-500	500-1000
Black	270370	3.7	60	30.0		400-800	700-1300
Purple	270371	4.0	60	30.0			1000-1800
Orange	270372	4.5	60	30.0			1300-2500
Pink	270373	4.8	60	30.0			1800-3500
White	271115	5.0	60	30.0			2500-5000

6.5 Type plate

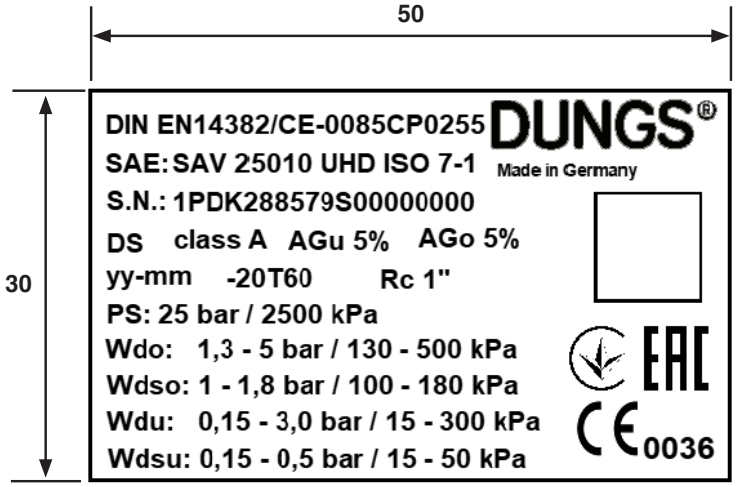

Abbreviation	Description
AGo	Response pressure group of the upper response pressure
AGu	Response pressure group of the lower response pressure
ASE	Safety shut-off valve (without housing)
DN	Nominal diameter
IS/DS	Integral or differential strength type
-20T60	Operating temperature range
Class A	Functional class: in case the comparison membrane is damaged or in the event of a breakdown of the auxiliary power supply, the SAV will close
p_{max}	Maximum operating pressure
PN	Nominal pressure of the flanges
PS	Maximum admissible pressure
SAV	Safety shut-off valve
SBV	Safety relief valve
SN	Serial number
SW	Wrench size
W_{do}	Adjustment range for the upper response pressure by using the available adjusting springs
W_{du}	Adjustment range for the lower response pressure by using the available adjusting springs
W_{dso}	Specific adjustment range of the adjusting spring installed for the upper response pressure
W_{dsu}	Specific adjustment range of the adjusting spring installed for the lower response pressure

7. Function

The SAV protects downstream lines against pressures that are too high or too low. As soon as the pre-set triggering pressure falls below or exceeds a limit due to a fault, the SAV interrupts automatically the gas flow. Under normal operating condition the SAV is open.
The SAV complies with the requirements of EN 14382 as safety shut-off valve.

Main components
A Valve disc
B Closing spring
C Ball catch / trigger mechanism
D Chamber with the pressure to be monitored
E Working diaphragm
F Push rod
G Setpoint spring for p_{do}
H Setpoint spring for p_{du}
I Protective cap

Function
Chamber **D** is connected to the outlet pressure via a pulse line.
The pressure to be checked acts on the working diaphragm **E**. The force of the setpoint springs **G** and **H** acts as counterforce.
In case of an unbalance of forces (overpressure or underpressure), the SAV is actuated and the gas supply is blocked.

If the outlet side of the gas pressure regulator and/or the fittings and devices of the succeeding gas line section, inclusive its equipment until the gas-consuming device, are not designed for the highest supply pressure (inlet pressure to the gas pressure regulator in case of an error), a SAV must be installed to shut down the gas supply before the gas pressure becomes too high:

Function in case of overpressure: Outlet pressure exceeds set value p_{do}
1. Diaphragm **E** is moved downwards against the force of the adjusting spring p_{do} **G** .
2. The ball of the ball catch **C** presses the guide cylinder toward the right.
3. The locking mechanism of the push rod is released.
4. Closing spring **B** presses the valve disc **A** to the valve seat via the push rod.
5. The SAV is in the closed position.

Function in case of underpressure: Outlet pressure falls below set value p_{du}
1. Diaphragm **E** is moved upwards against the force of the adjusting spring p_{du} **H** .
2. The ball of the ball catch **C** presses the guide cylinder toward the right.
3. The locking mechanism of the push rod is released.
4. Closing spring **B** presses the valve disc **A** to the valve seat via the push rod.
5. The SAV is in the closed position.

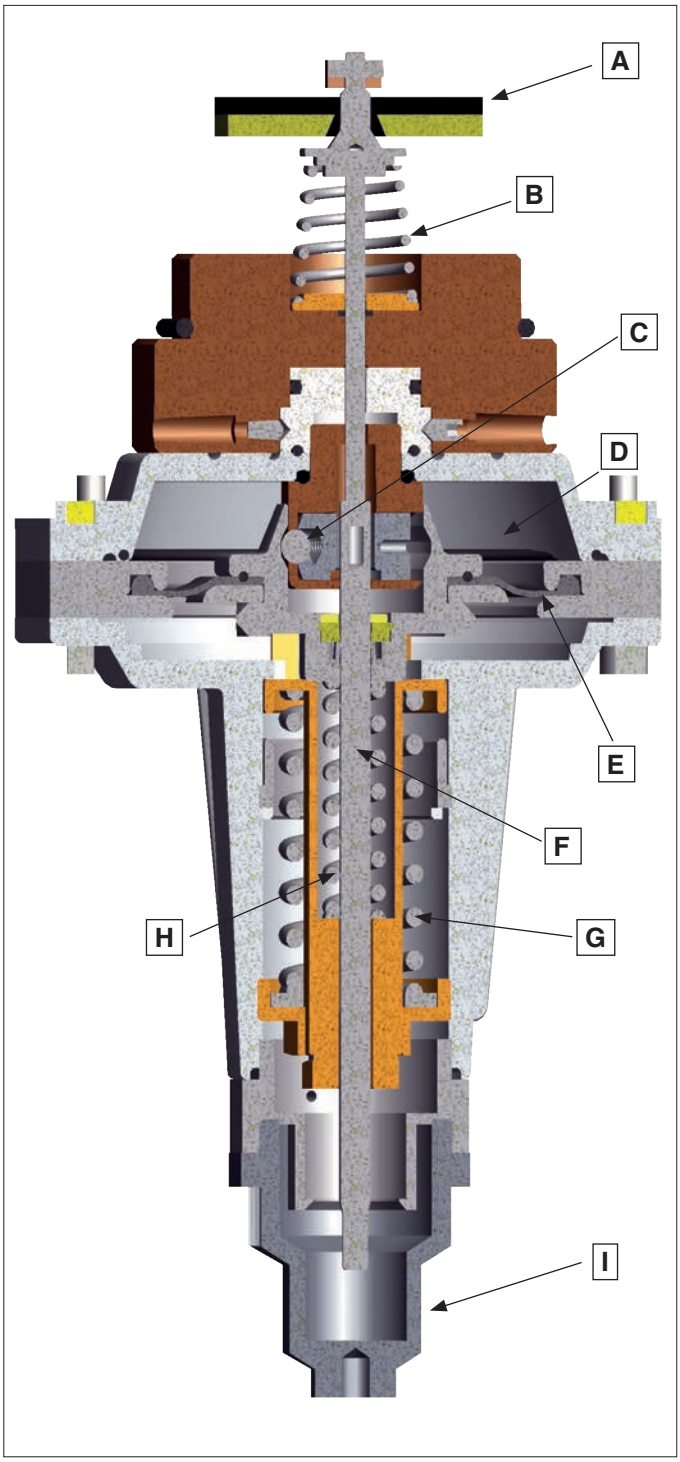

Unlocking the SAV
1. The SAV can only be opened manually.
2. Unscrew and rotate protective cap I
3. Screw protective cap **I** onto the push rod.
4. Use protective cap **I** as a handle
5. Compensate pressure by opening the compensation valve on the valve disc: Pull protective cap **I** downwards, approx. 2 mm.
6. Then pull protective cap **I** as far as it will go and lock it into place.
7. The SAV is open.

8. Dimensions

8.1 Dimensions SAV flanged

SAV 100/250...

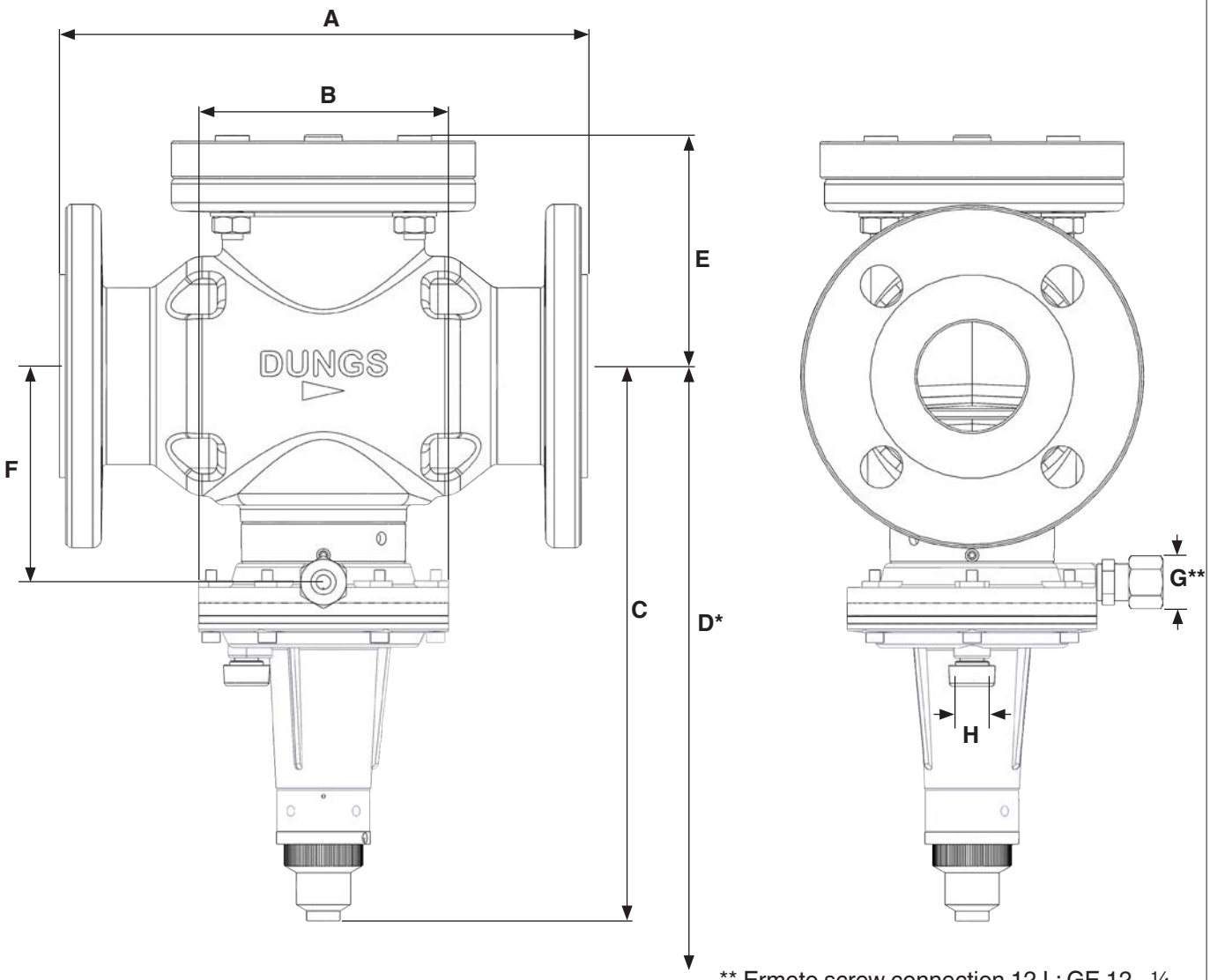

* Space required for unlocking

** Ermeto screw connection 12 L: GE 12 - ¼
with screw connection M 16 for pipes 12 x 1.5

Type	Order number		p máx. [bar/kPa]	DN	Dimensions [mm]								Weight [kg]
	DIN	ANSI			A	B	C	D	E	F	G	H	
SAV 100025 ND	270290	277797	10 / 1 000	25	184	120	240	490	83	78	12 x 1,5	G ¼	7,6
SAV 100025 MD	270291	277799	10 / 1 000	25	184	120	237	487	83	78	12 x 1,5	G ¼	7,6
SAV 250025 UHD	271122	275186	25 / 2 500	25	184	120	244	494	83	78	12 x 1,5	G ¼	7,6
SAV 100040 ND	270293	277801	10 / 1 000	40	223	120	251	501	106	90	12 x 1,5	G ¼	13,3
SAV 100040 MD	270294	277802	10 / 1 000	40	223	120	497	497	106	90	12 x 1,5	G ¼	13,3
SAV 250040 UHD	271123	275184	25 / 2 500	40	223	120	255	505	106	90	12 x 1,5	G ¼	13,3
SAV 100050 ND	270296	277804	10 / 1 000	50	254	120	260	510	116	99	12 x 1,5	G ¼	16,0
SAV 100050 MD	270297	277805	10 / 1 000	50	254	120	256	506	116	99	12 x 1,5	G ¼	16,0
SAV 250050 UHD	271124	273855	25 / 2 500	50	254	120	264	514	116	99	12 x 1,5	G ¼	16,0

8.2 Dimensions SAV threaded

SAV 100/250...

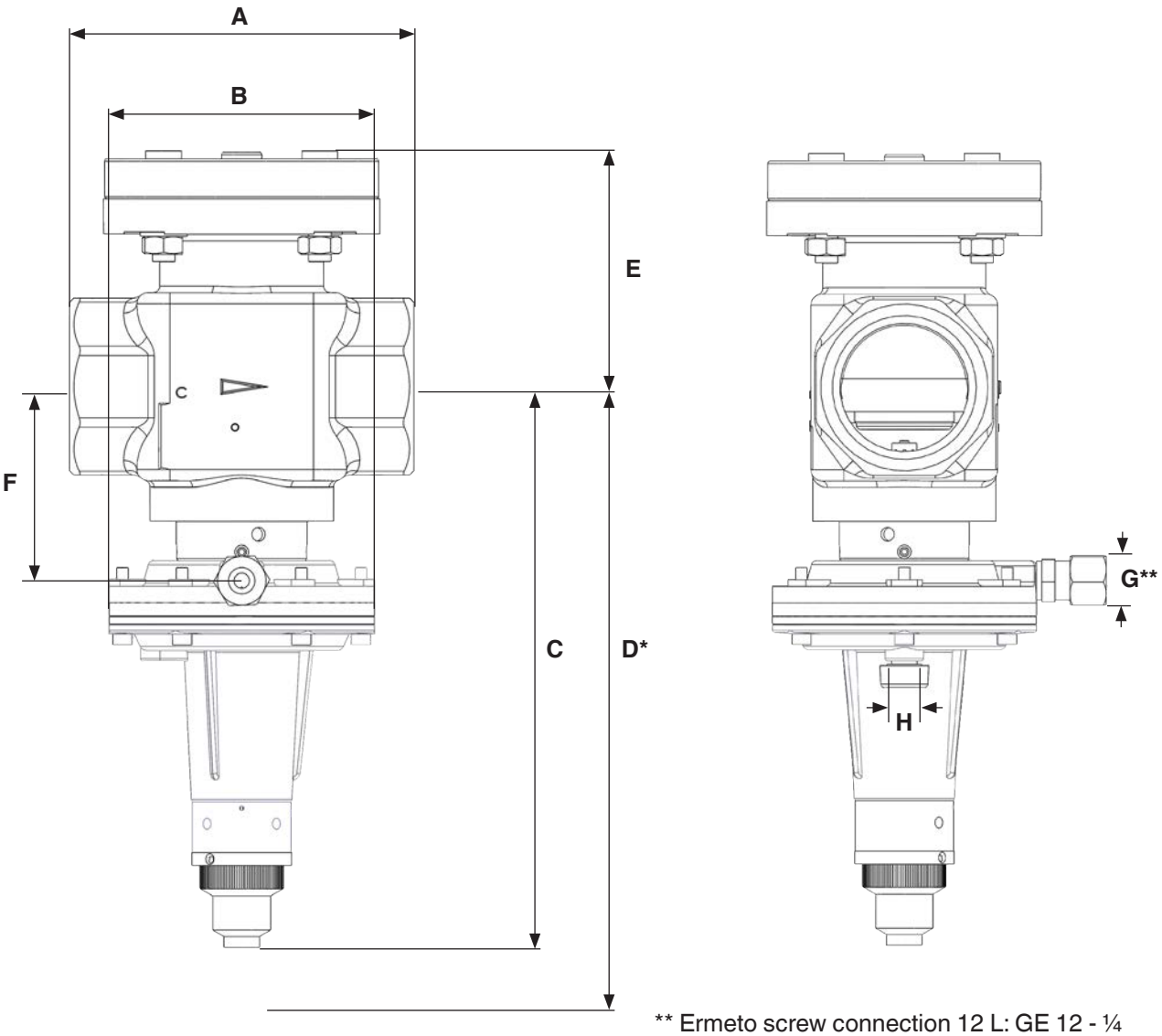

* Space required for unlocking

** Ermeto screw connection 12 L: GE 12 - ¼
with screw connection M 16 for pipes 12 x 1.5

Type	Order number		p máx. [bar/kPa]	Con-nection	Dimensions [mm]								Weight [kg]
	G	NPT			A	B	C	D	E	F	G	H	
SAV 10010 ND	287907	287916	10 / 1 000	1"	104	120	238	488	62	77	12 x 1,5	G ¼	4,1
SAV 10010 MD	287908	287917	10 / 1 000	1"	104	120	238	488	62	77	12 x 1,5	G ¼	4,1
SAV 25010 UHD	287909	287918	25 / 2 500	1"	104	120	243	493	62	77	12 x 1,5	G ¼	4,1
SAV 10015 ND	287910	287919	10 / 1 000	1½"	132	120	240	490	62	79	12 x 1,5	G ¼	5,4
SAV 10015 MD	287911	287920	10 / 1 000	1½"	132	120	240	490	62	79	12 x 1,5	G ¼	5,4
SAV 25015 UHD	287912	287921	25 / 2 500	1½"	132	120	245	495	62	79	12 x 1,5	G ¼	5,4
SAV 10020 ND	287913	287922	10 / 1 000	2"	156	120	249	499	106	88	12 x 1,5	G ¼	8,7
SAV 10020 MD	287914	287923	10 / 1 000	2"	156	120	249	499	106	88	12 x 1,5	G ¼	8,7
SAV 25020 UHD	287915	287924	25 / 2 500	2"	156	120	254	504	106	88	12 x 1,5	G ¼	8,7

9. Installation

9.1 General information

- **This device can only be installed in compliance with the applicable rules and standards and in accordance with the local regulations and authorisations that may be necessary.**
- **The device can only be installed in a building or in a housing.**
- **The work area must be provided with general safety devices.**
- **The lifting devices used must be suitable for the load to be lifted.**
- **Enough installation space for operation and maintenance has to be provided.**
- **It is recommended installing a filter with a pore size ≤ 50 µm upstream of the regulator.**
- **The installation must not impair the functioning of other components.**

Check prior to installation!

- Shut-off valves both on the inlet and outlet side are closed.
- Lines are free from combustible gas.
- Prevent explosive gas-air mixture: the room atmosphere must constantly be monitored through gas concentration measuring devices for the detection of gas leakages.
- Ensure electrically conductive bridging. Prevent contact voltage and ignitable flashover.
- The performance data on the type plate correspond to the ordering data.
- Flanges on the inlet side and outlet side of the connecting line are parallel.
- The sealing surfaces of the flange are undamaged and clean.
- The maximum inlet pressure of the system is lower than the maximum admissible pressure of the regulator.
- Protective caps at the connecting flange must be removed.
- The minimum distances for the setting must be observed.
- The pipeline on the inlet side must be free of water and dirt.
- The SAV must be in the closed position.

Make sure during installation!

- Tighten the screws crosswise.
- Tightening torques must be observed.
- Vent lines and blow-off lines have to be positioned individually.
- Vent lines and blow-off lines must end in free space: gases must be exhausted to a safe place.
- The pulse lines may not be shut off.
- The specified distance between the measuring points of the pulse lines must be observed.
- The flow direction (arrow) on the housing must be followed.





9.2 Installation instructions

- The installation must be carried out according to the installation scheme specified below.
- Install the safety shut-off valve in the flow direction (arrow/housing).
- Design a straight calming section with the same diameter.
- Make sure that the pulse tap at the calming section is clean and free from burrs. Distance > 5 x DN.
- Maximum flow velocity in the calming section: ≤ 30 m/s.
- Version of the pulse lines: steel pipe D= 12 x 1.
- Avoid accumulation of condensate: install the pulse lines with a gradient.

Installation scheme

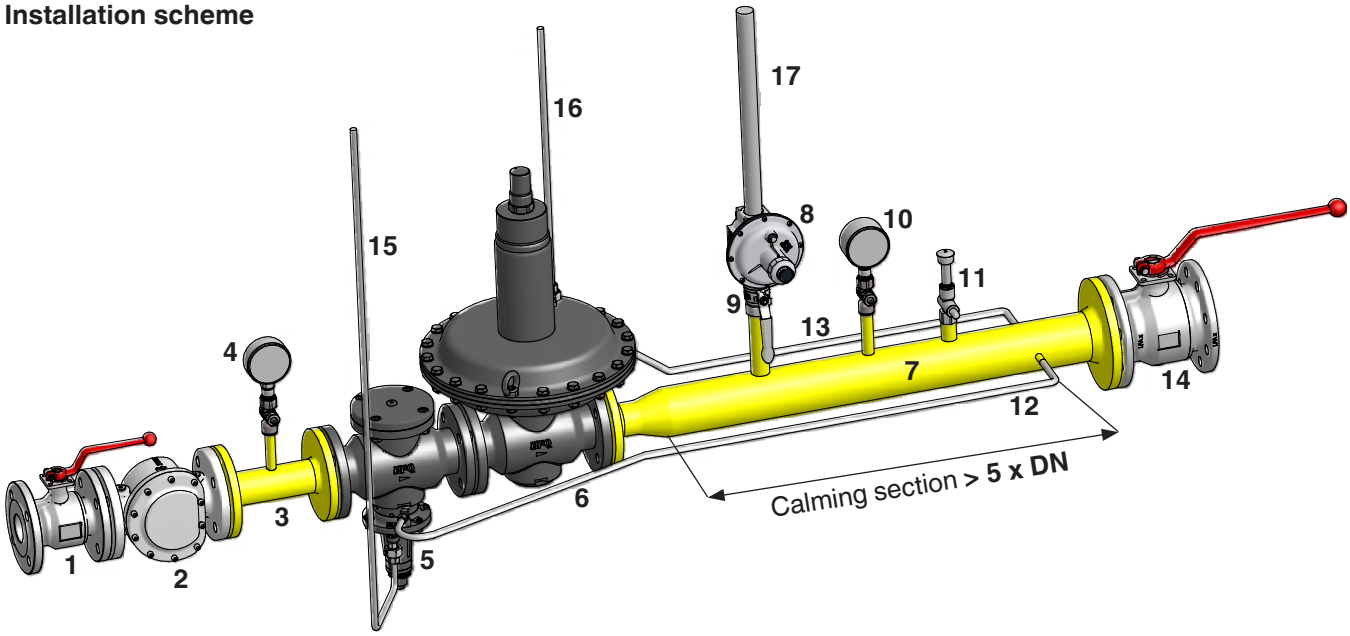

Pos.	Designation
1	Shut-off valve, inlet side (e.g. ball valve or butterfly valve)
2	Filter
3	Welded part
4	Pressure gauge, inlet side
5	SAV
6	Regulator
7	Calming section
8	SBV
9	Ball valve
10	Pressure gauge, outlet side
11	Test burner
12	Pulse line SAV
13	Pulse line regulator
14	Shut-off valve, outlet side (e.g. ball valve or butterfly valve)
15	SAV vent line
16	Regulator vent line
17	SBV relief line

Mounting position

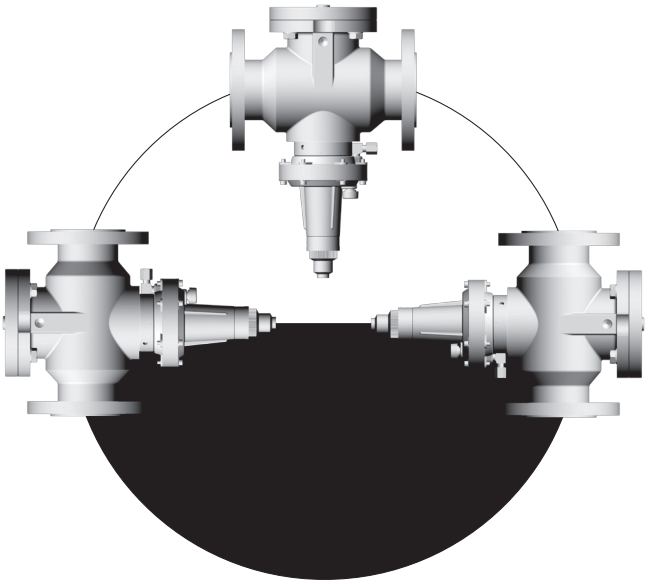

9.3 Torques



Use adequate tools!
Tighten the screws crosswise!

The device must not be used as lever.

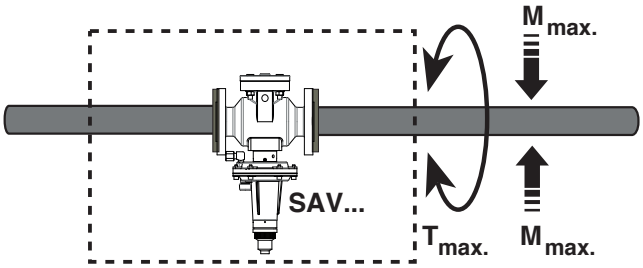

DN	--	--	--	25	40	50	65	80	100	125	150
Rp	⅜	½	¾	1	1 ½	2	2 ½	--	--	--	--
$M_{max.}$ [Nm] t 10 s	70	105	225	340	610	110	1600	2400	5000	6000	7600
$T_{max.}$ [Nm] t 10 s	35	50	85	125	200	250	325	400	--	--	--

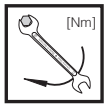

Max. torque of system accessories								
DN	--	--	--	25	40	50	65	80
M … / G …	M 4	M 5	M 6	M8	G ⅛	G ¼	G ½	G ¾
$M_{max.}$ [Nm] t 10 s	2.5 Nm	5 Nm	7 Nm	15 Nm	5 Nm	7 Nm	10 Nm	15 Nm



Max. torque of flanged joint		
Stud	M 12 x 55 (EN 13611)	M 16 x 65 (DIN 939)
$M_{max.}$ [Nm] t 10 s	30 Nm	60 Nm

10. Setting overpressure/underpressure

Switch-off setting in case of overpressure p_{do}

1. Remove the protective cap **A**.
2. Turn the external adjusting screw **B** using a socket wrench SW 22.
3. Turning clockwise: increases (+) the upper shut-down pressure $p_{do.}$
4. Turning counter-clockwise: reduces (-) the upper shut-down pressure p_{do}.
5. After the setting: screw on the protective cap **A** again.

Triggering setting in case of underpressure p_{du}

1. **Remove** the protective cap **A**.
2. **Turn the internal** adjusting screw **C** using a socket wrench SW 17.
3. Turning clockwise: increases (+) the lower shut-down pressure p_{du}.
4. Turning counter-clockwise: reduces (-) the lower shut-down pressure p_{du}.
5. After the setting: Screw on the protective cap **A** again.

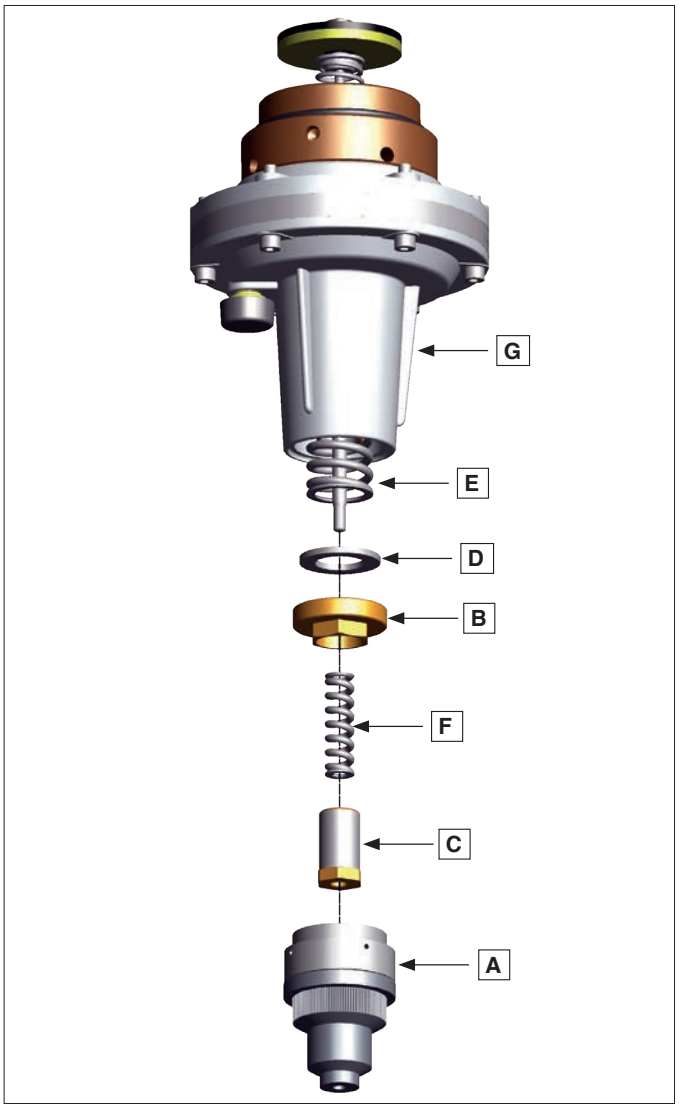

10.1 Recommended set values

A mutual influence of the pressure regulator and the safety shut-off valve must be excluded.	
Calculation of the recommended set values according to the outlet pressure p_d of the regulator	• The SAV must lock as soon as 1.1 times the max. system-specific operating pressure is reached. • The SAV set values must be defined taking into account the settings and tolerances of the pressure regulator. • The tolerances and set values of additional safety devices must also be considered when setting the SAV. • In case of a fault or regular shut-down of the downstream shut-off valve, the SAV may not respond. The upper shut-down pressure must be determined accordingly.
$p_d \leq 100$ mbar $p_{do} = p_d + 50$ mbar	
100 mbar < $p_d \leq 200$ mbar $p_{do} = p_d + 100$ mbar	
$p_d > 200$ mbar $p_{do} = p_d$ **x** 1.5	

10.2 Spring replacement

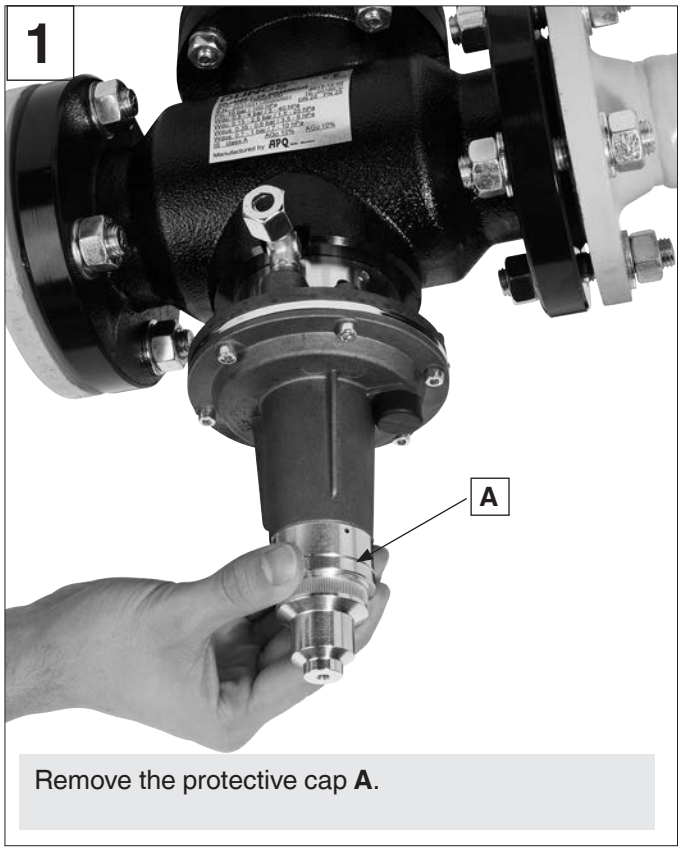

Remove the protective cap **A**.

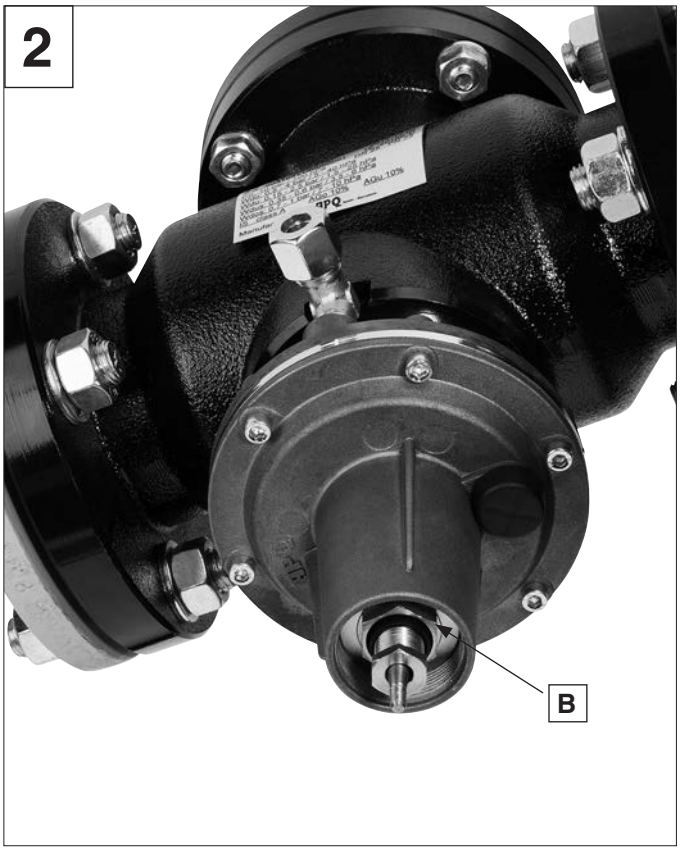

10.2.1 Spring replacement W_{dso}

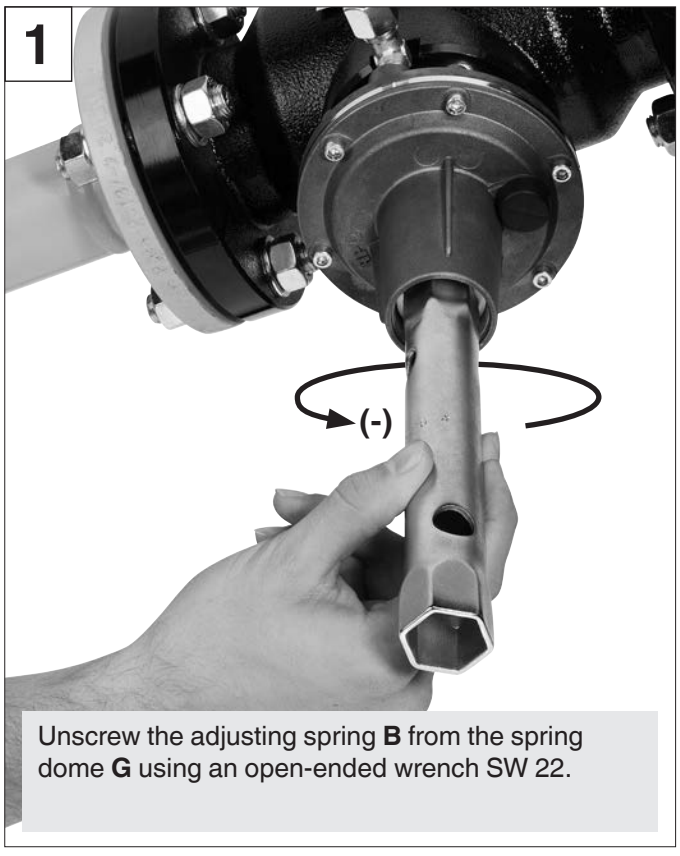

Unscrew the adjusting spring **B** from the spring dome **G** using an open-ended wrench SW 22.

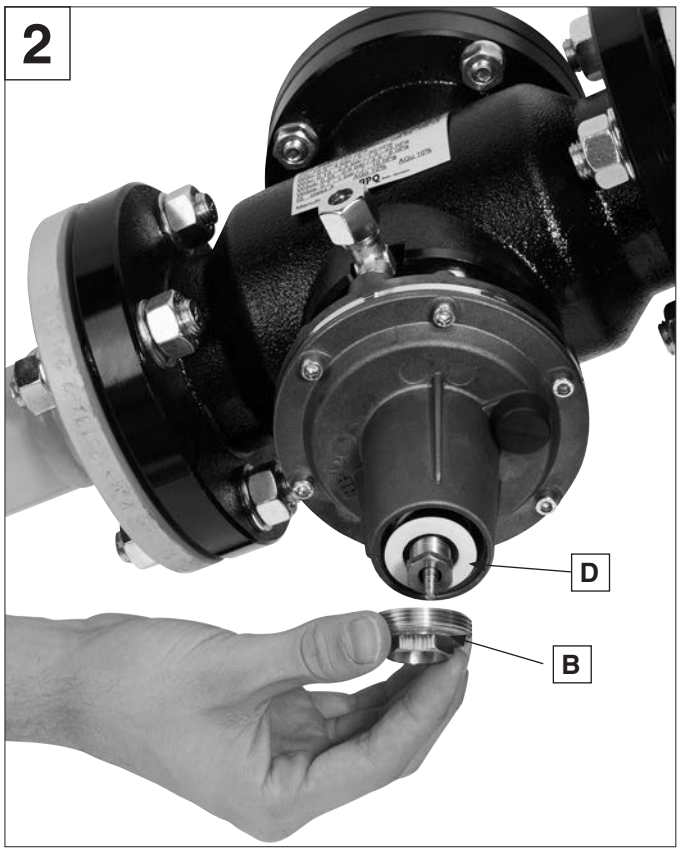

3

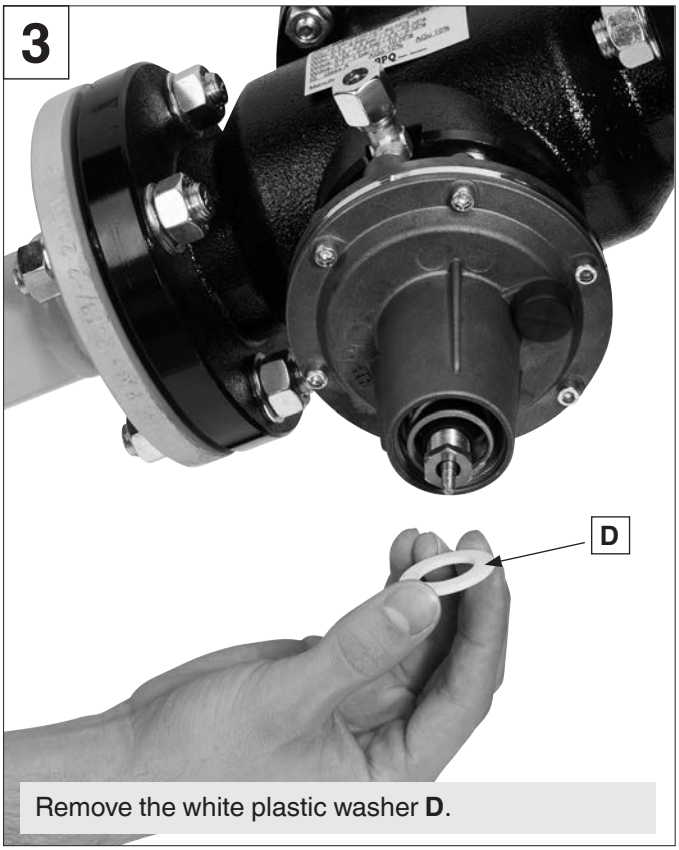

Remove the white plastic washer **D**.

4

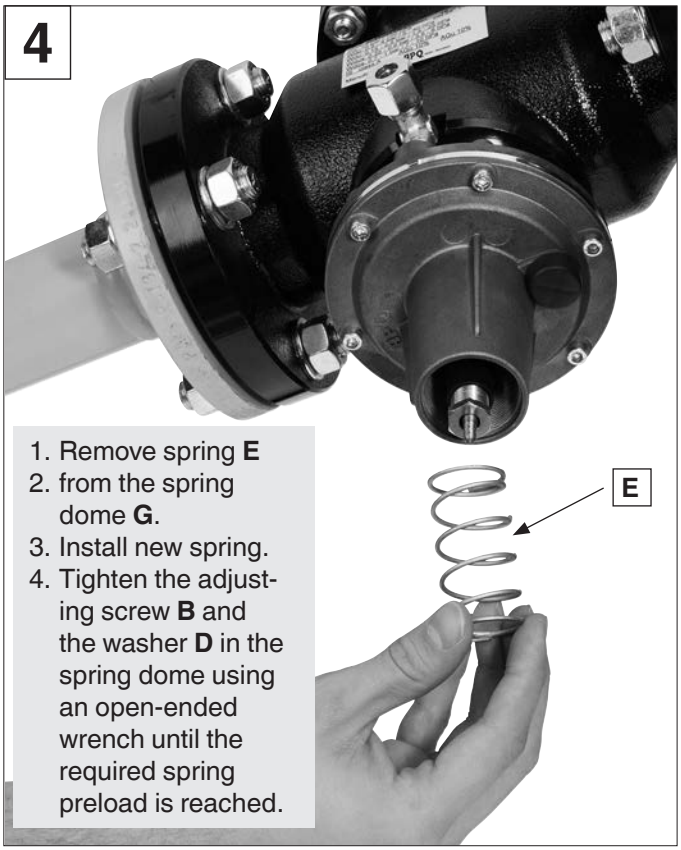

1. Remove spring **E**
2. from the spring dome **G**.
3. Install new spring.
4. Tighten the adjusting screw **B** and the washer **D** in the spring dome using an open-ended wrench until the required spring preload is reached.

10.2.2 Spring replacement W_{dsu}

1

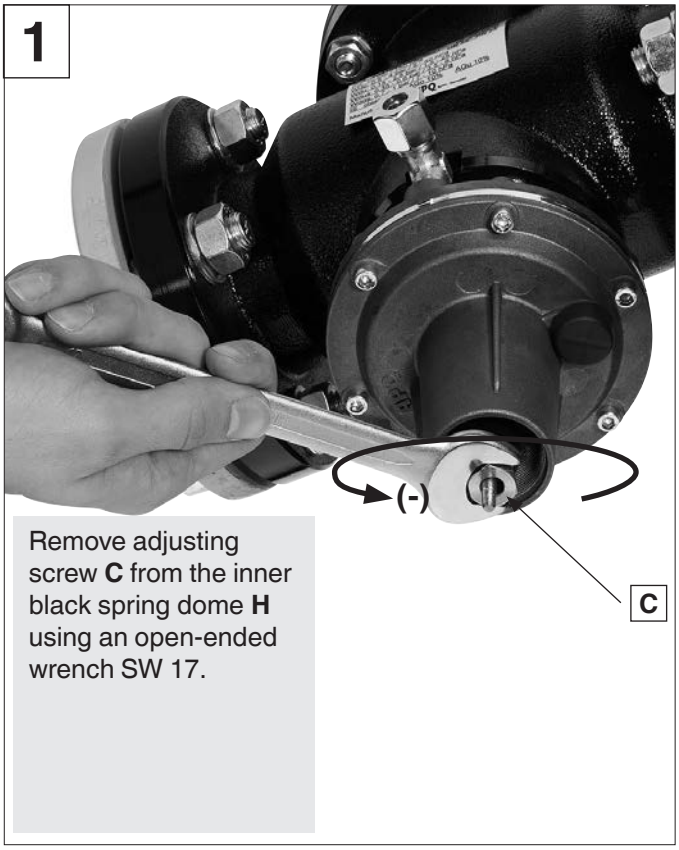

Remove adjusting screw **C** from the inner black spring dome **H** using an open-ended wrench SW 17.

2

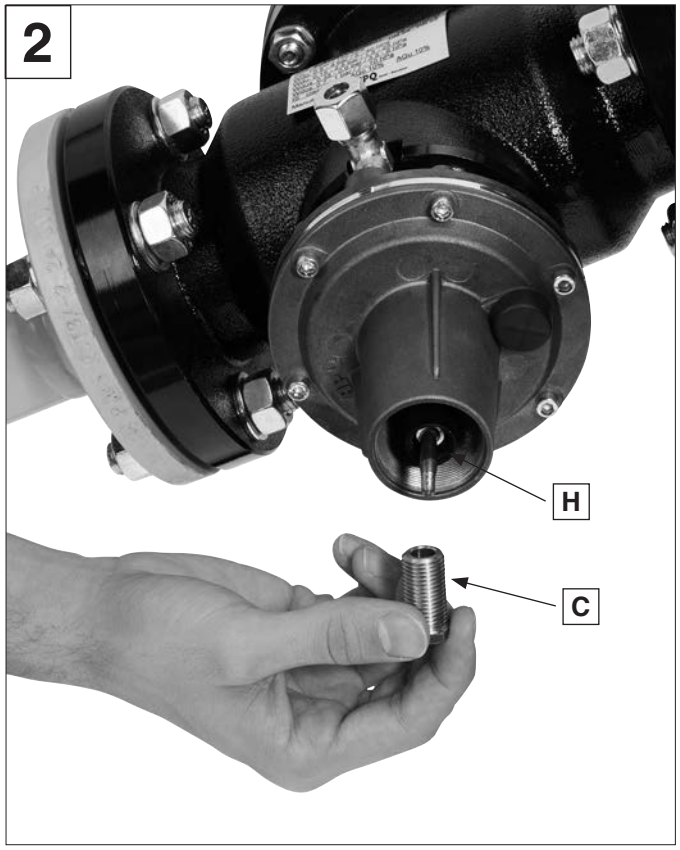

3

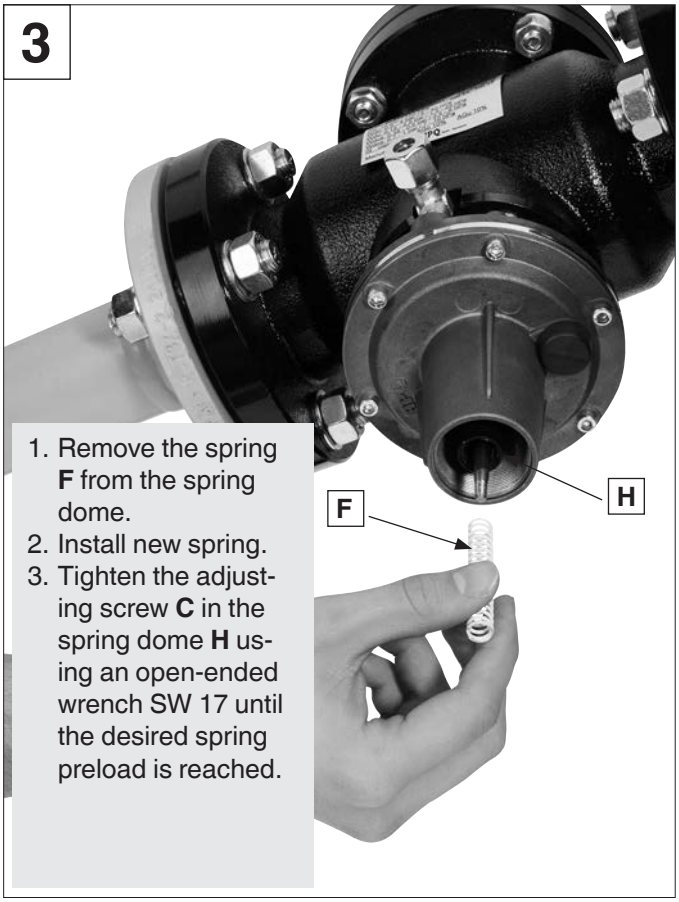

1. Remove the spring **F** from the spring dome.
2. Install new spring.
3. Tighten the adjusting screw **C** in the spring dome **H** using an open-ended wrench SW 17 until the desired spring preload is reached.

4

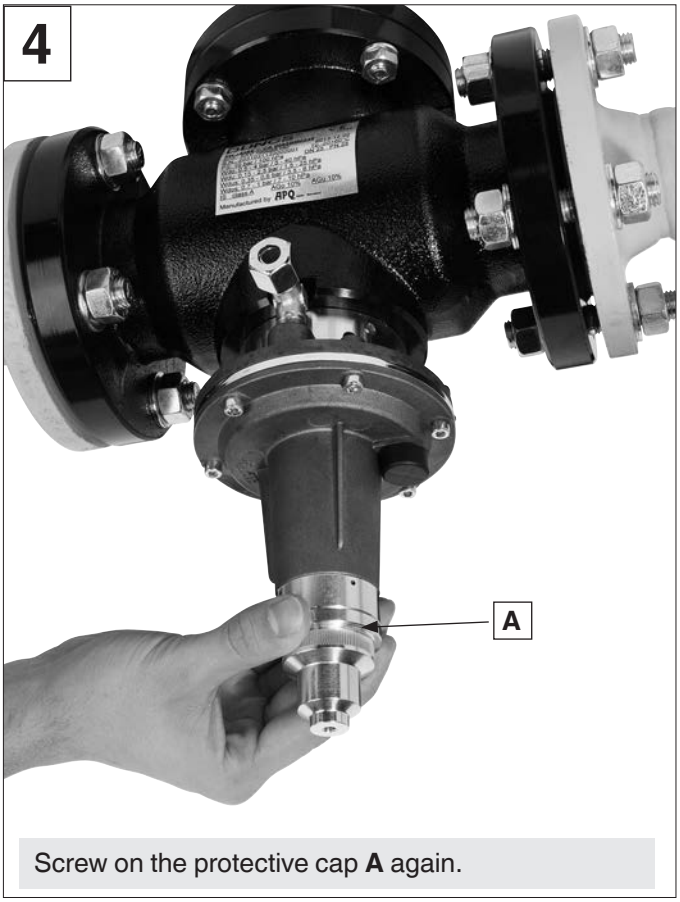

Screw on the protective cap **A** again.

11. Commissioning and Decommissioning

11.1 General information

Prior to commissioning

- **The performance data on the type plate correspond to the ordering data.**
- **Prevent explosive gas-air mixture: the room atmosphere must constantly be monitored through gas concentration measuring devices for the detection of gas leakages.**
- **Operate the device only if all safety devices are fully functional.**
- **Only qualified personnel is allowed to carry out the commissioning.**

11.2 Leakage test

Before commissioning the SAV, check for internal and external leakage.

1. Test gas of the leakage test: air or inert gases.
2. Upstream and downstream shut-off valves must be closed.
3. Release the test section. Release the gas in a controlled and safe manner into the atmosphere.
4. Test pressure > blow-off pressure SBV: Block the line upstream of the SBV.
5. Connect the test section to the test device and apply pressure.
6. Test pressure: 1.1 x the system-specific operating pressure. Maximum PS of the SAV (SAV 100… 10 bar/SAV 250…25 bar). Please take into account the different compressive strengths of the system.
7. Observe the waiting time necessary for the pressure compensation according to the system-specific volume.

External leakage

8. Use a suitable leak detection spray on the SAV.
9. Monitor the foam formation.

Internal leakage

10. Release the pressure in the test section downstream of the SAV.
11. Monitor the pressure increase on the outlet side: Pressure gauge accuracy 0.1 mbar.
12. Once the leakage test has been carried out, open the shut-off valve upstream of the SBV.
13. Release pressure in the test section.

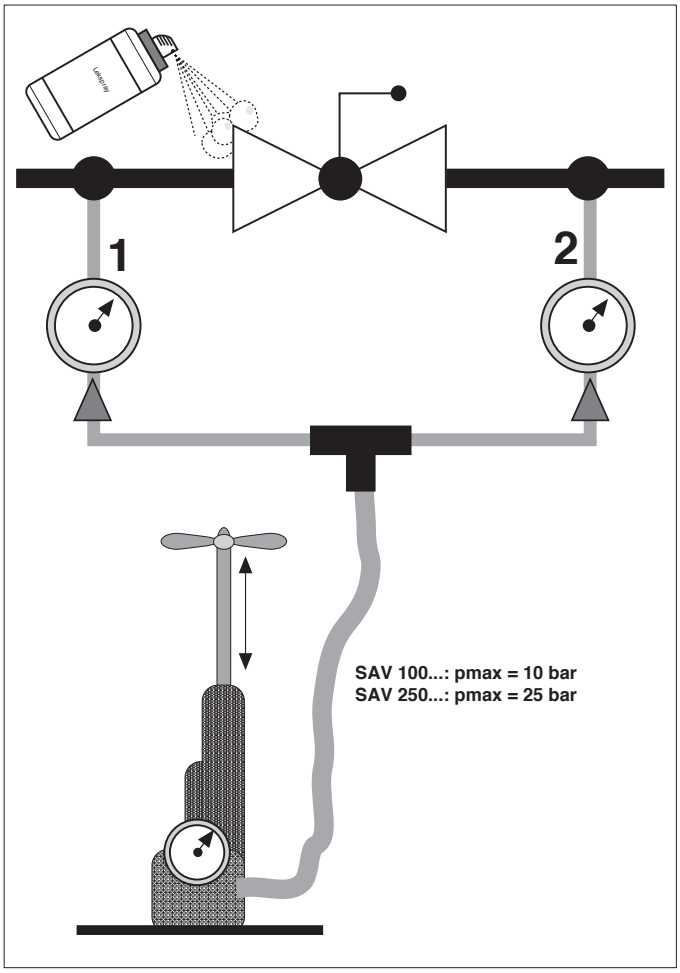

11.3 Commissioning / unlocking / venting

1. Slowly open the shut-off valve on the inlet side. The ball valve on the outlet side remains closed.
2. Monitor the pressure increase on the pressure gauge on the inlet side upstream of the SAV.
3. Slowly open the SAV:

3.1

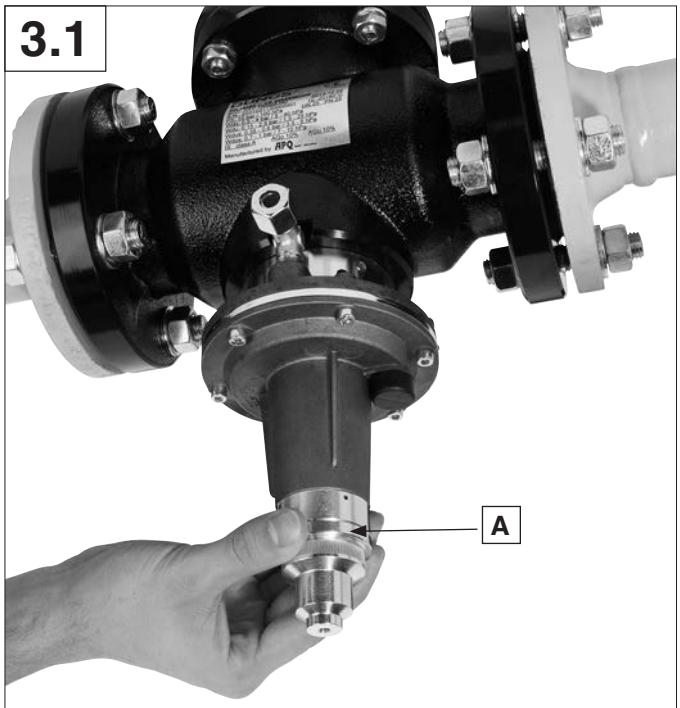

Unscrew the protective cap **A**.

3.2

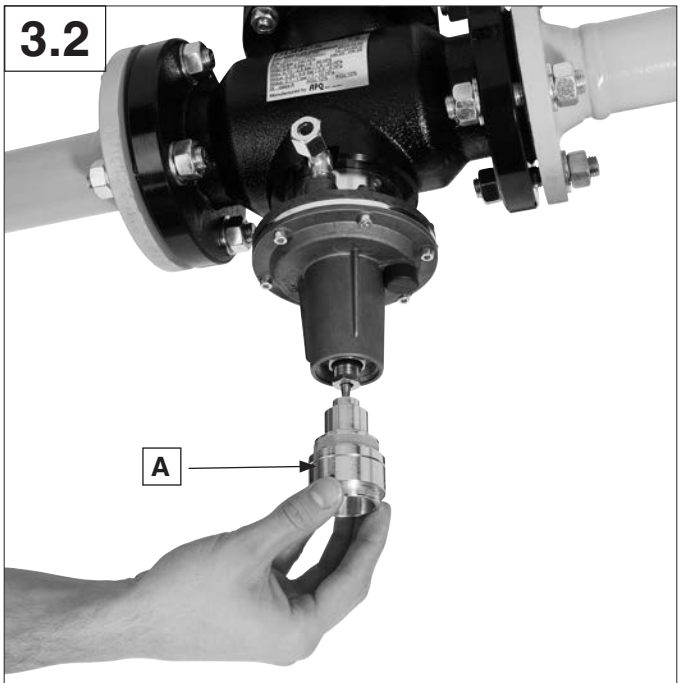

Reverse the protective cap **A** and screw it again onto the push rod of the SAV.

3.3

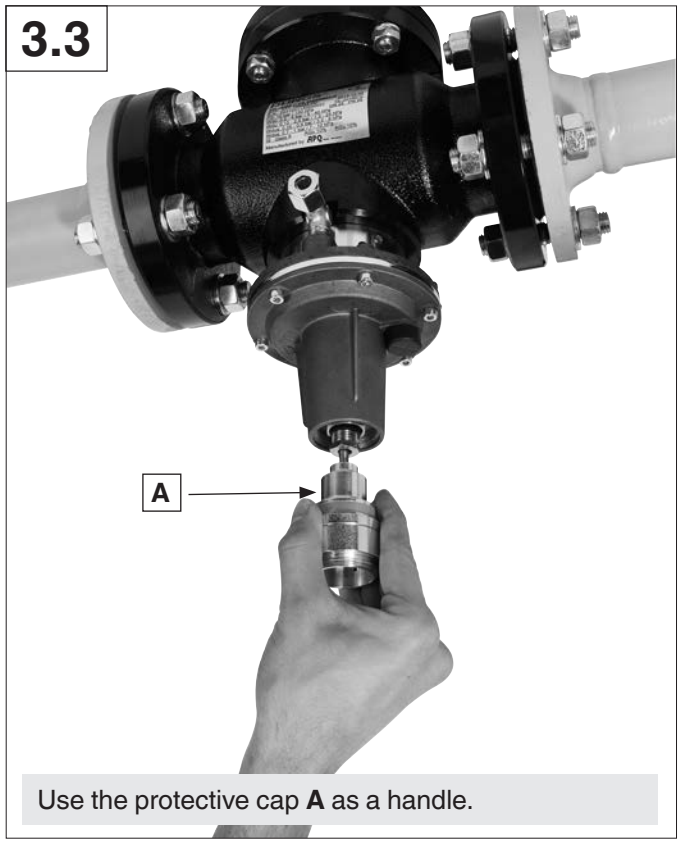

Use the protective cap **A** as a handle.

Unlocking the SAV

1. Compensate pressure by opening the compensation valve on the valve disc: Pull protective cap **A** downwards, approx. 2 mm.
2. Monitor the pressure increase on the outlet side on the pressure gauge.
3. Operating pressure on the outlet side reached: pull the protective cap **A** to the stop and lock it.
4. The SAV is open.
5. Unscrew the protective cap **A** from the push rod and screw it again on the spring dome.
6. Vent the test section into the atmosphere using a suitable hose. Do not use a test burner for venting.
7. The test section must be completely filled with gas: make sure that the test section is free from air by using a test burner. Close the stop-cock on the venting hose and screw on the plug.
8. Remove the hose.
9. Slowly open the shut-off valve on the outlet side.

For an explanation of pressure compensation, see page 19 →

11.4 Pressure compensation

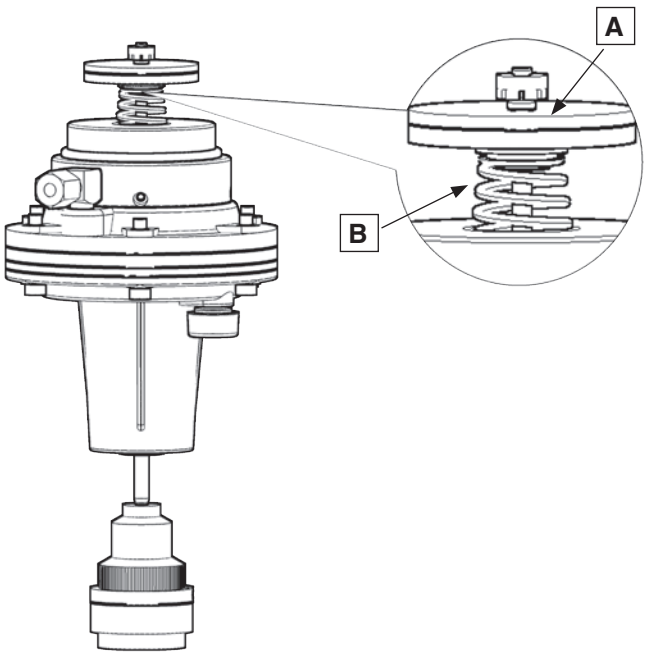

1. SAV closed
Valve disc **A** is pressed onto the valve seat by means of closing spring **B**.

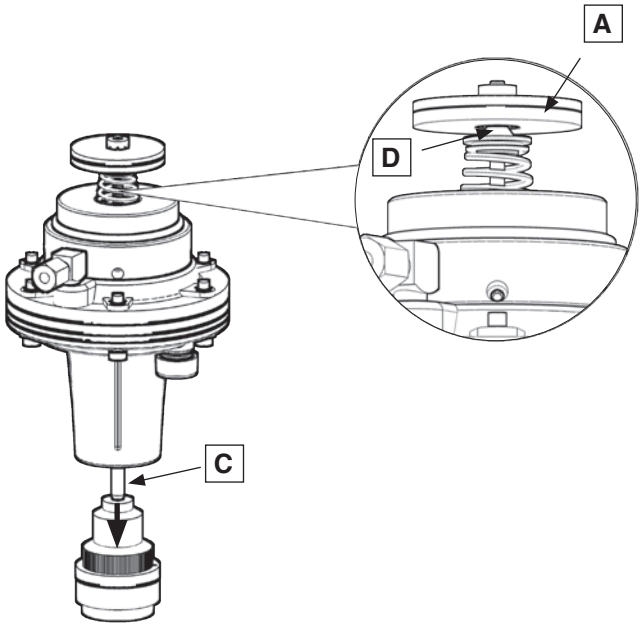

2. Compensation valve open/pressure compensation
Short pull on push rod **C** will open compensation valve **D**. While doing so, valve disc **A** will remain on the valve seat.

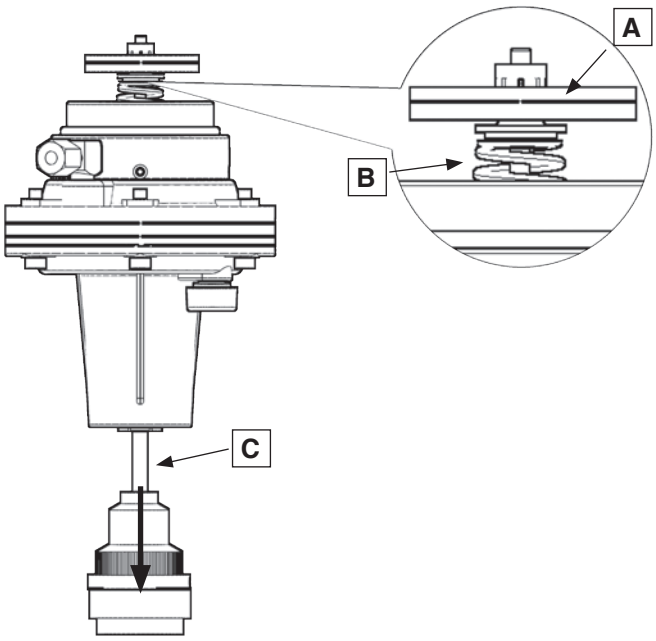

3. SAV open
Continued pulling on push rod **C** lifts the valve disc off the valve seat against the force of the closing spring **B**. Valve is open.

11.5 Checking the setting

Checking the upper shut-down pressure p_{do}

1. Slowly close the shut-off valve on the outlet side:
2. SBV installation on the outlet side: block the line upstream of the SBV.
3. Check the upper triggering pressure of the SAV: create wind load on the outlet side (reduction in pressure pulse)
4. Create a lockable connection between the inlet and outlet sides.
5. Conduct the inlet pressure to the outlet side by slowly opening the stopcock in the bypass.
6. Monitor the pressure increase on the outlet side on the pressure gauge.
7. Avoid an inadmissibly high pressure on the outlet side: After triggering the SAV, stop applying pressure immediately.
8. Read the upper response pressure on the pressure gauge on the outlet side and compare it with the setpoint.
9. The determined triggering pressure must be within the response tolerance (AG_o) of the setpoint.
10. If necessary, correct the response pressure according to the specifications under “Setting” and check it again.

Checking the lower shut-down pressure p_{du}

1. Release the pressure in the test section on the outlet side until the operating pressure is reached.
2. Release the gas in a controlled and safe manner into the atmosphere.
3. Monitor pressure drop on the pressure gauge.
4. Unlock the SAV.
5. Create the wind load: continue to release the gas selectively and safely on the outlet side into the atmosphere.
6. After triggering the SAV: Read the lower response pressure on the pressure gauge on the outlet side and compare it with the setpoint.
7. The determined triggering pressure must be within the response tolerance (AG_u) of the setpoint.

Pressure release in the test section

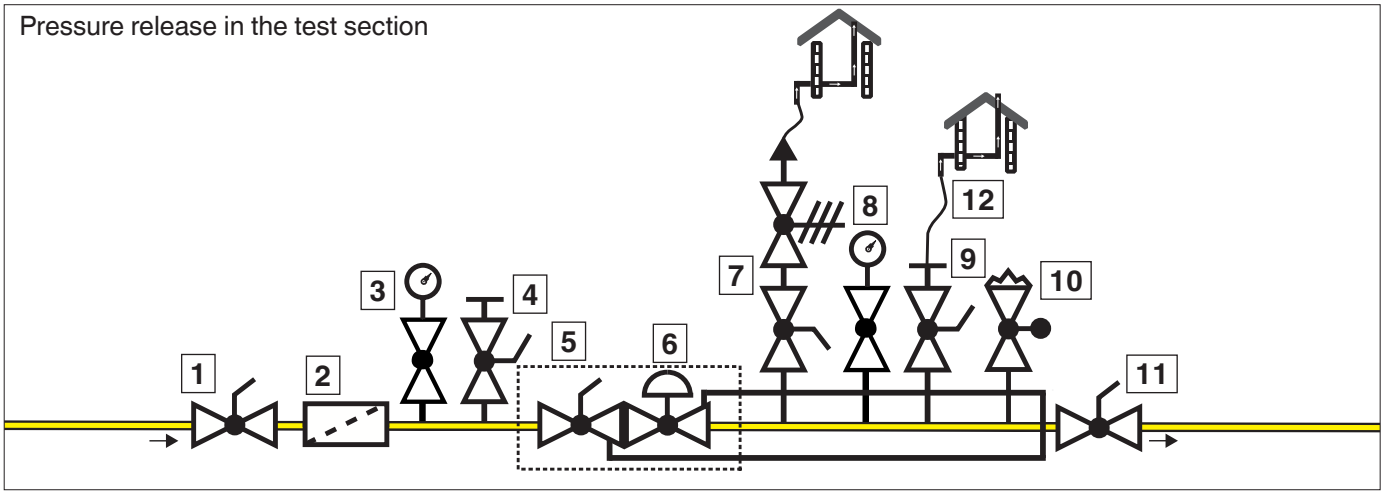

Creation of wind load

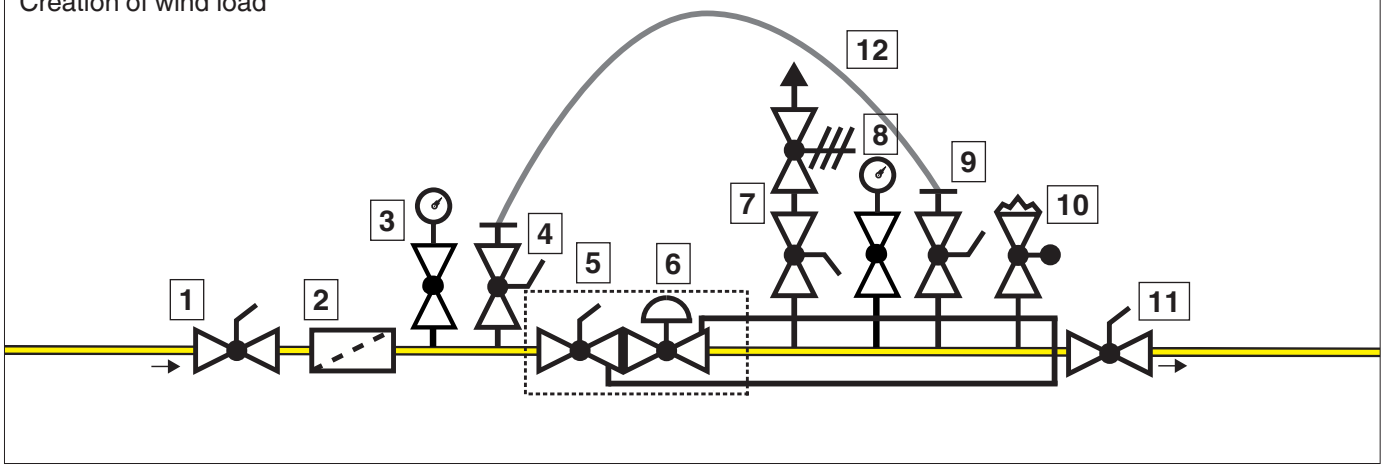

Pos.	Designation
1	Shut-off valve, inlet side
2	Filter
3	Pressure gauge with pushbutton cock
4	Venting ball valve
5	SAV
6	Pressure regulator

Pos.	Designation
7	SBV with shut-off valve
8	Pressure gauge with pushbutton cock
9	Venting ball valve
10	Test burner
11	Shut-off valve, outlet side
12	Hose

11.6 Recommissioning

1. Close the shut-off valve upstream of the bypass.
2. Remove the hose.
3. Open the ball valve upstream of the SBV.
4. Slowly open the SAV, see section 11.3.
5. Once SAV has been opened completely, open the shut-off valve on the outlet side.

11.7 Decommissioning

1. Slowly close the shut-off valve on the outlet side.
2. Slowly close the shut-off valve on the inlet side.
3. Release gas in the test section in a controlled and safe manner into the atmosphere.

12. Faults



- **Repair work on the device must only be performed by authorised and skilled personnel.**
- **Use only original spare parts.**

Fault	Possible causes	Troubleshooting
It is not possible to open/ activate the SAV.	The pulse line is not installed.	Install the pulse line.
	The pulse line is clogged.	Clean the pulse line.
	The pulse line is bent.	Replace the pulse line.
	The pulse pressure is outside the adjustment range.	Set the outlet pressure.
	The adjusting springs are not suitable for the application.	Replace the adjusting spring.
	The adjustment range of the SAV is outside the outlet pressure.	Replace the SAV or the ASE.
The SAV does not switch or does not respond.	The pulse line is not installed.	Connect/install the pulse line.
	The pulse line is clogged.	Clean the pulse line.
	The pulse line is bent.	Replace the pulse line.
	The pulse pressure is outside the adjustment range.	Replace the pulse line.
	The adjusting springs are not suitable for the application.	Replace the adjusting spring.
The SAV switches, but does not seal.	The valve disc is damaged or worn out.	Replace the ASE or have it repaired by DUNGS.
	The valve seat is damaged.	Replace the valve seat.
	The movable parts are contaminated with foreign particles.	Clean the movable parts or replace the ASE.
	The drive is damaged.	Replace the ASE.
	The O-ring is damaged.	Replace the O-ring or the ASE.
The SAV is leaking towards the atmosphere.	The working diaphragm is damaged.	Change the working diaphragm or replace the ASE.
	The sealing ring between the ASE and the housing of the SAV is damaged.	Replace the sealing ring or the ASE.
	The O-ring in the ASE is damaged.	Replace the O-ring or the ASE.

13. Maintenance

13.1 General information

- **The Pressure Equipment Directive (PED) requires the regulator to be checked at regular intervals to ensure: safety and correct functioning of the device, high long-term utilisation ratios, resulting in minimum environmental impact.**
- **The maintenance of the device can only be carried out in compliance with the applicable rules and standards and in accordance with current local regulations.**
- **Maintenance work on the device must only be performed by authorised and skilled personnel.**
- **Adhere to the maintenance intervals indicated.**
- **The risks in case of an escape of flammable or noxious gases into the atmosphere have to be assessed.**
- **Always install new seals after replacement or modification of parts.**
- **Use only original spare parts.**
- **Do not use alcohol-based or solvent-containing cleaning solutions for cleaning the device.**

Prior to maintenance

- Shut-off valves both on the inlet and outlet side are closed.
- Line is depressurised and free from combustible gas.
- Prevent explosive gas-air mixture: the room atmosphere must constantly be monitored through gas concentration measuring devices for the detection of gas leakages.
- SAV is in the closed position.
- Original spare parts are available.

SAV …

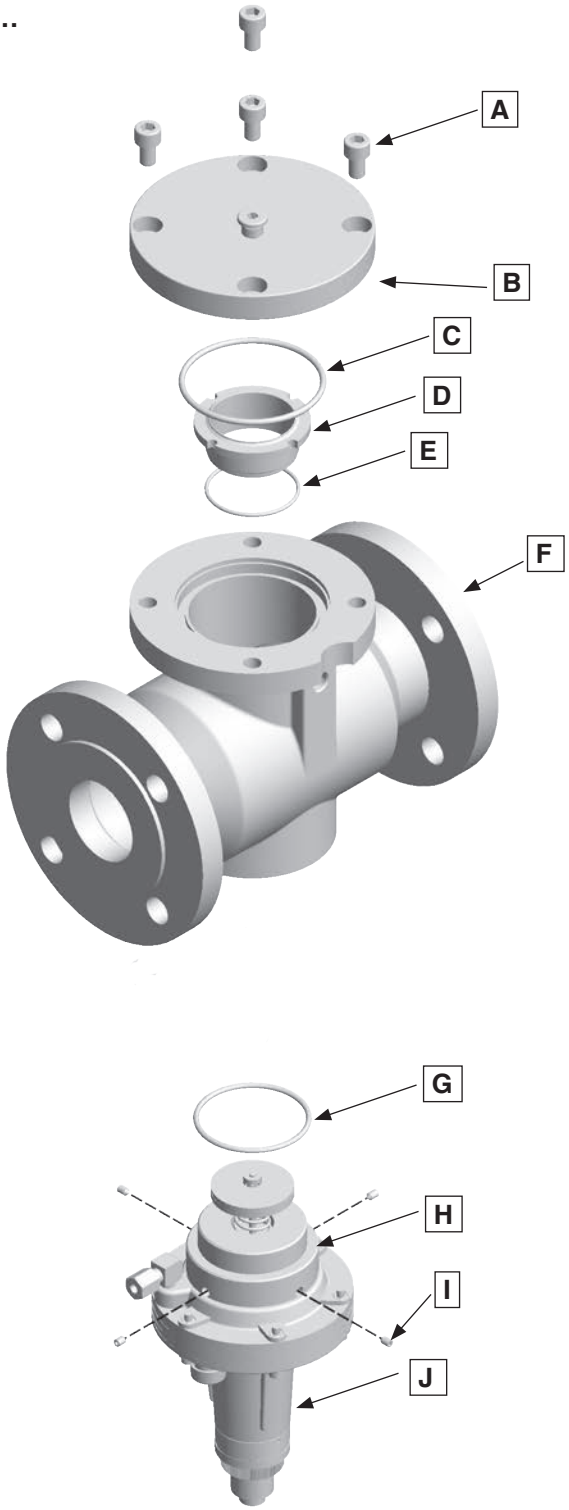

Pos.	Designation
A	Allen screws, 4 units
B	SAV cover
C	O-ring
D	Valve seat
E	Sealing ring for valve seat
F	SAV housing
G	O-ring
H	ASE connecting piece / housing
I	Hexagonal socket grub screws, 4 units
J	ASE
K	Diaphragm shell
L	Push rod
M	O-ring of the diaphragm shell
N	Lower diaphragm disc
O	Working diaphragm
P	Adjusting spring of the lower shut-down pressure
Q	Upper diaphragm disc

Pos.	Designation
R	Allen screws, 6 units
S	Spring dome ASE
T	Adjusting screw of the upper shut-down pressure
U	Adjusting screw of the lower shut-down pressure
V	Protective cap

13.2 Maintenance instructions

13.2.1 Preparation

1

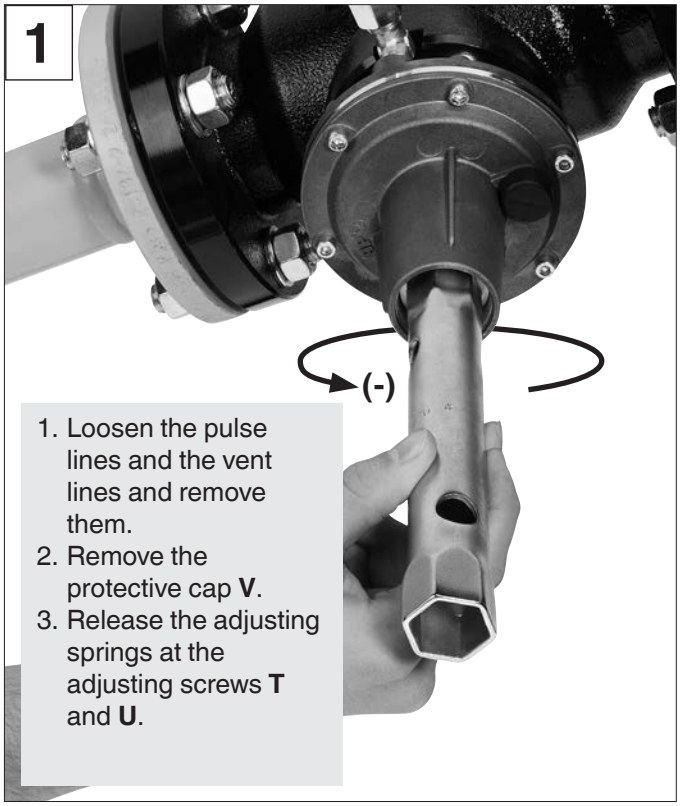

1. Loosen the pulse lines and the vent lines and remove them.
2. Remove the protective cap **V**.
3. Release the adjusting springs at the adjusting screws **T** and **U**.

2



13.2.2 Removing the ASE from the housing

1

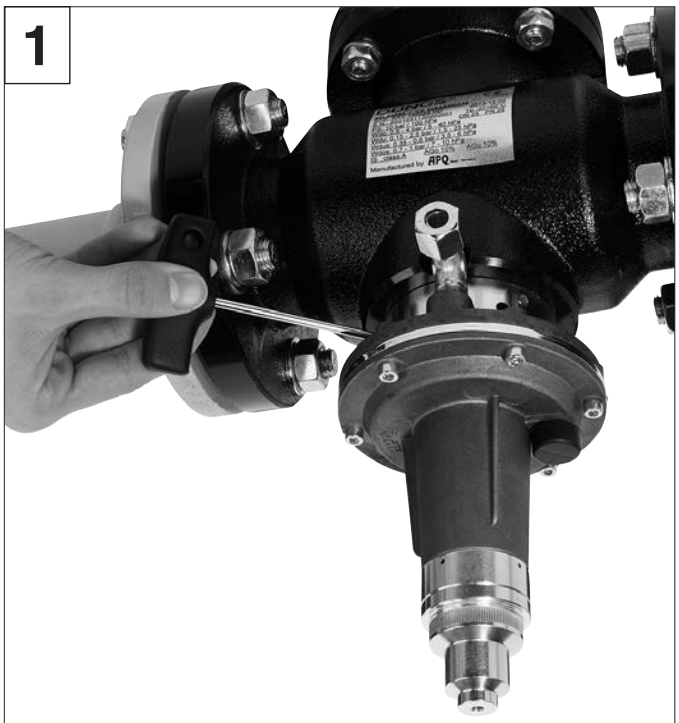

Loosen four hexagonal socket grub screws (M 5x8) using an internal hex key SW 2.5.

2

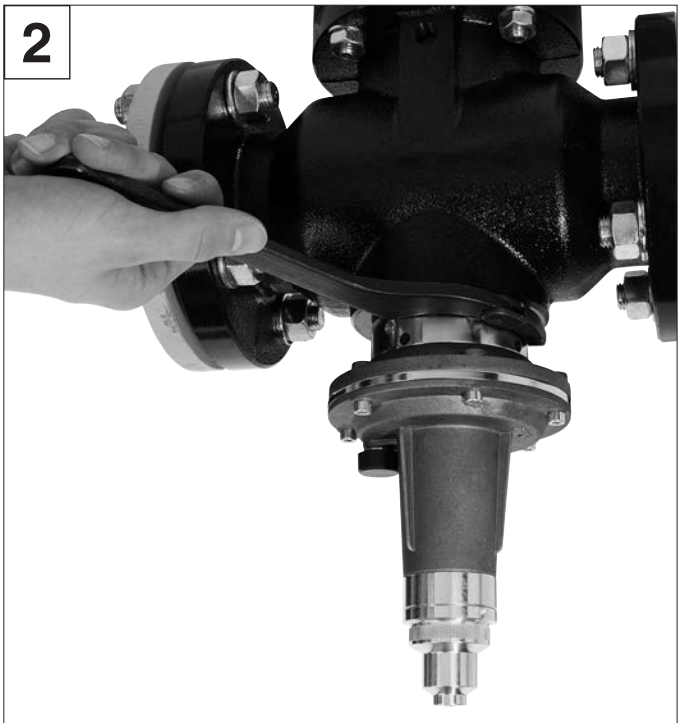

Remove the ASE from the housing **F** using a hook wrench 60-90.

3



Remove the ASE **J.**

13.2.3 Checking/replacing the valve seat

1

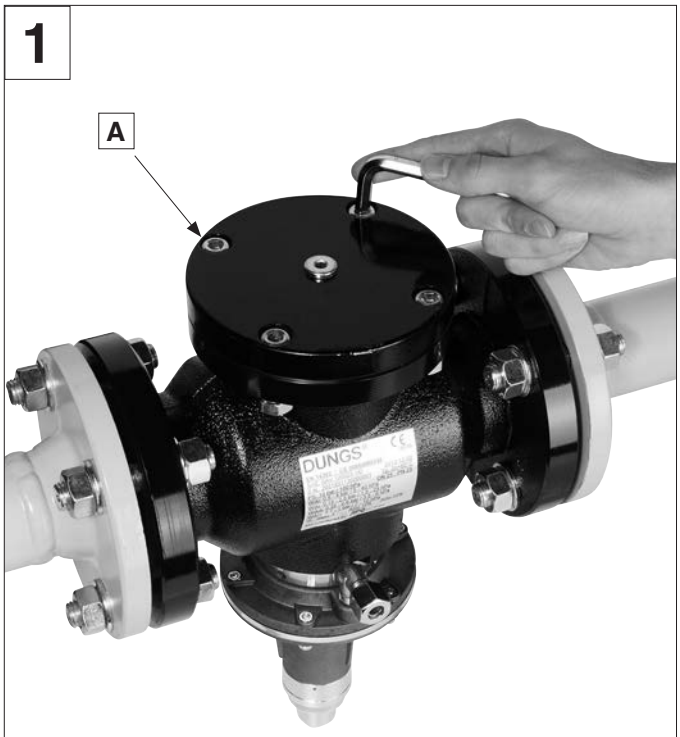

Loosen four Allen screws **A**.

2

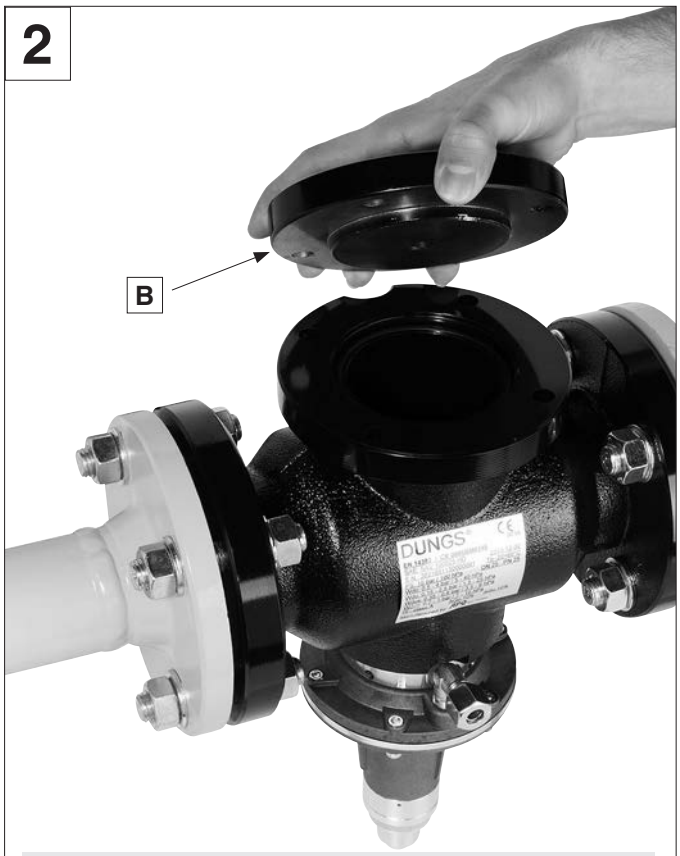

Remove cover **B.**

3

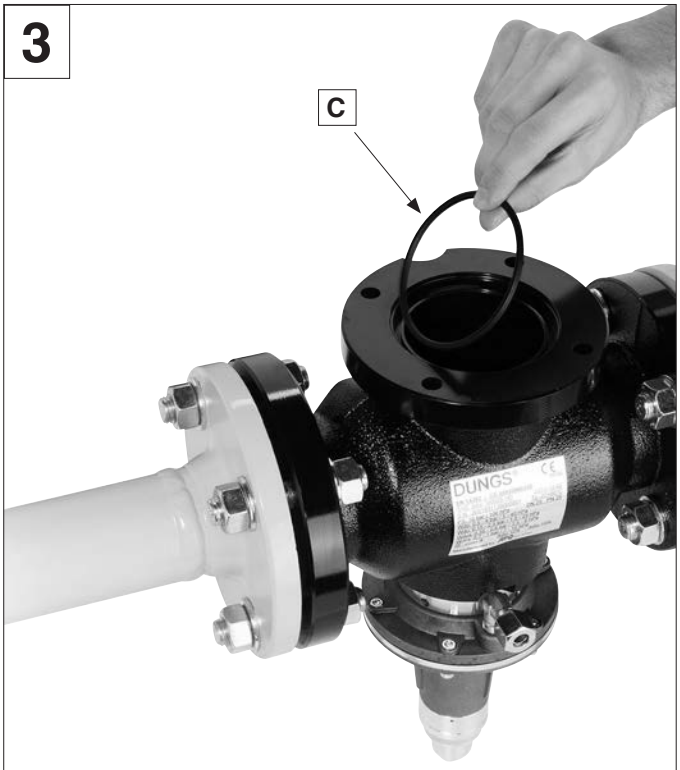

Remove the O-ring **C**.

4

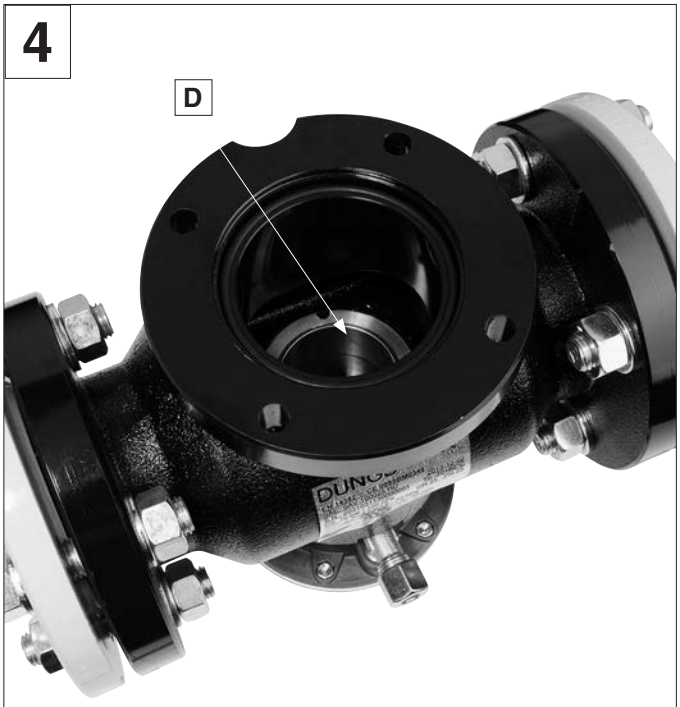

Clean the SAV housing on the inside. Check valve seat **D** for dirt and damage.

5



Unscrew the valve seat **V** from the housing using a socket wrench.

6

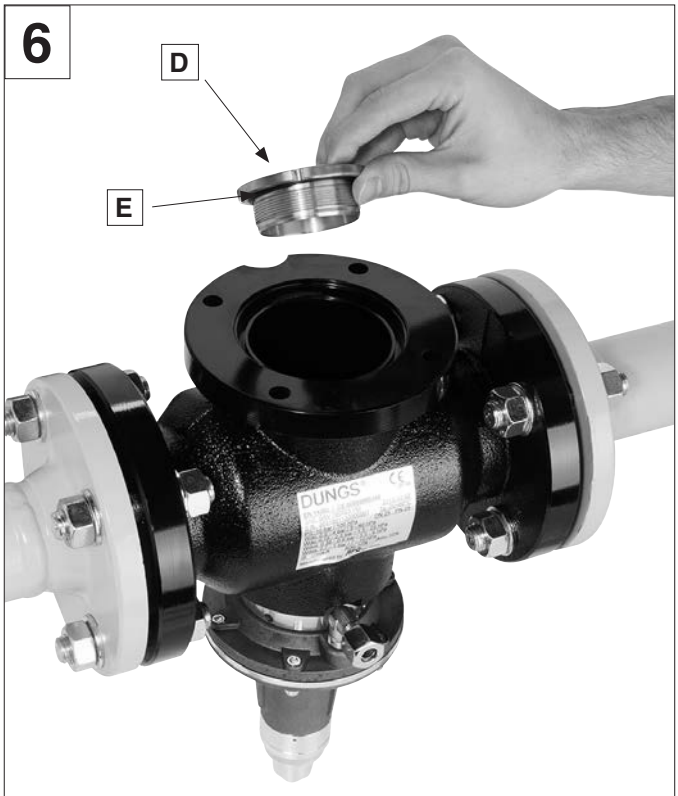

Screw the new valve seat **D** with the new O-ring **E** into the housing **F**.

7

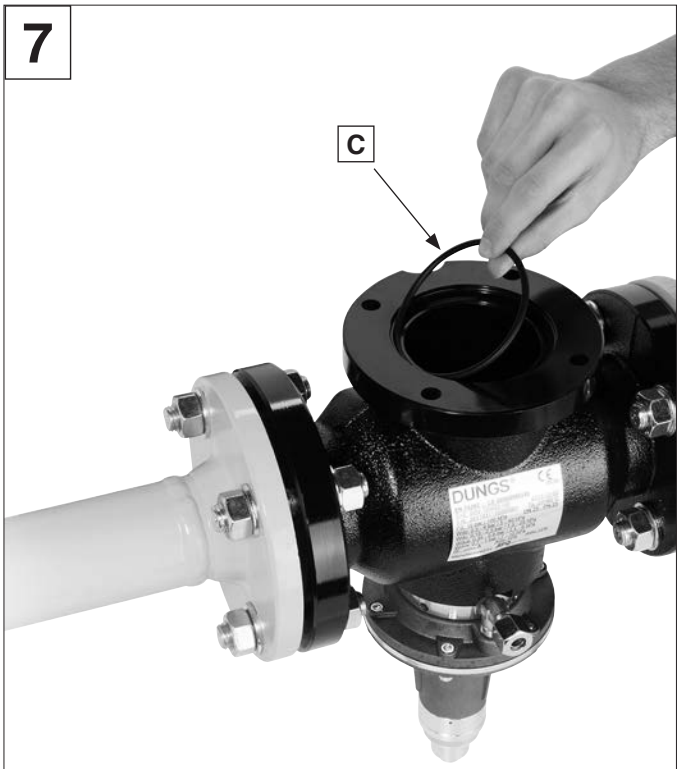

Insert new O-ring **C** into the turned groove

8

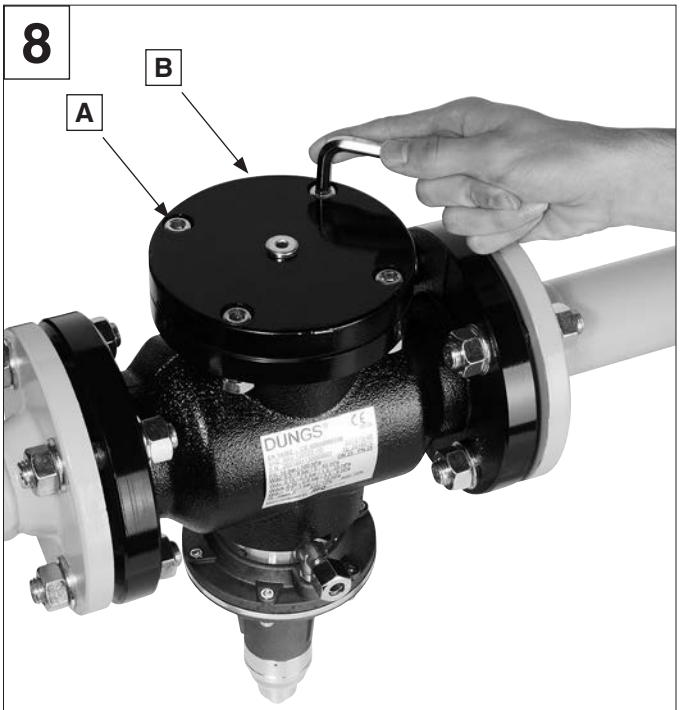

Mount cover **B** again by tightening the four Allen screws **A**.

13.2.4 Mounting the ASE on the housing

1	Place the new O-ring G in the turned groove on the housing **M** intended for this purpose.
2	Screw the thread of the connecting piece **H** into the housing **F** using a hook wrench.
3	Fix the connecting piece **H** of the ASE **J** using 4 hexagonal socket grub screws **I** (M5x8).

13.3 Required tools

A



B



C1



C2

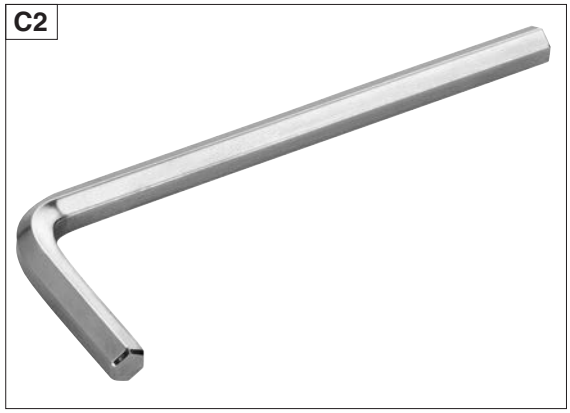

D



E

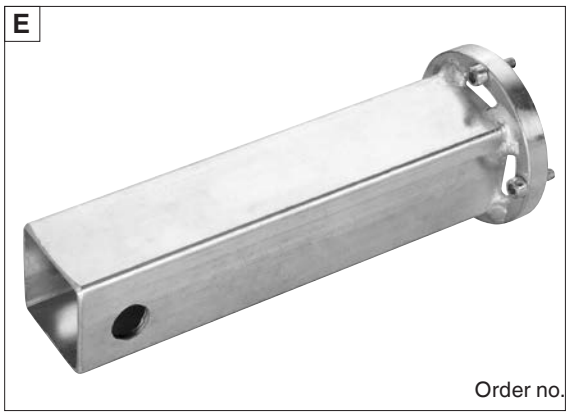

Order no. 271170

Work step		Tool designation	Pressure rating	Wrench size		
				DN 25	DN 40	DN 50
1	Loosen the pulse line.	Open-ended wrench (A)	ND/MD/HD/UHD	SW 24	SW 24	SW 24
2	Release the adjusting springs.	Socket wrench (B)	ND/MD/HD/UHD	SW 17	SW 17	SW 17
		Socket wrench (B)		SW 22	SW 22	SW 22
3	Remove ASE from the housing.	Internal hex key (C1)	ND/MD/HD/UHD	SW 2.5	SW 2.5	SW 2.5
		Jointed hook wrench with pins according to DIN 1810 (D)		60-90	60-90	60-90
4	Replace the valve seat.	Internal hex key (C2)	ND/MD/HD/UHD	SW 6	SW 8	SW 8
		Socket wrench/ valve seat wrench VSW (E)		SW 30	SW 46	VSW
5	Replace the working diaphragm on the ASE.	Internal hex key (C2)	ND/MD/HD/UHD	SW 4	SW 4	SW 4

13.4 Leakage test

After maintenance or repair work, check the SAV for internal and external leakages.

1. Test gas of the leakage test: air or inert gases.
2. Upstream and downstream shut-off valves must be closed.
3. Test pressure > blow-off pressure SBV: Block the line upstream of the SBV.
4. Connect the test section to the test device and apply pressure.
5. Test pressure: 1.1 x system-specific operating pressure. Maximum PS of the SAV (SAV 100… 10 bar/SAV 250…25 bar). Please take into account the different compressive strengths of the system.
6. Observe the waiting time necessary for the pressure compensation according to the system-specific volume.

External leakage

7. Use a suitable leak detection spray on the SAV.
8. Monitor the foam formation.

Internal leakage

9. Release the pressure in the test section downstream of the SAV.
10. Monitor the pressure increase on the outlet side: Pressure gauge accuracy 0.1 mbar
11. Once the leakage test has been carried out, open the shut-off valve upstream of the SBV.
12. Release pressure in the test section.
13. Check the correct functioning and set values, see section 11.3.

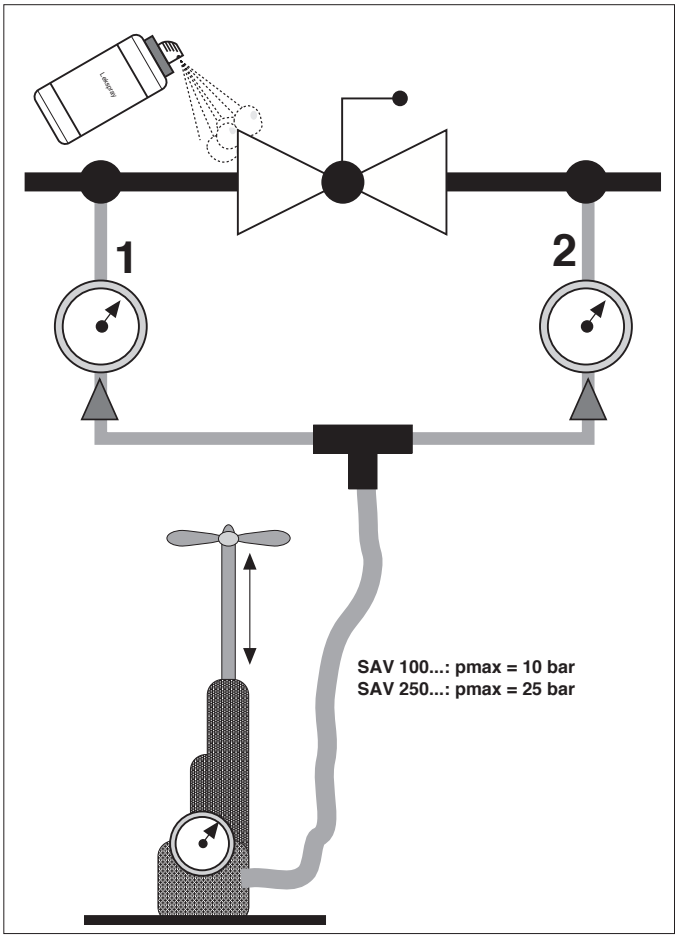

13.5 Recommended maintenance intervals

1. The maintenance intervals depend on the system-specific operating and environmental conditions, gas quality, condition of the pipelines, etc.
2. The maintenance intervals have to be set by the system operator according to the system requirements.
3. It is recommended performing a functional test on a monthly basis and carrying out maintenance work every year, in order to guarantee the system availability.
4. It is necessary to comply at least with the maintenance intervals specified in G 495.

Max. inlet pressure (bar)	Functional test	Maintenance
> 0.1 to 1	every 4 years	every 8 years
> 1 to 5	every 2 years	every 4 years
> 5	once a year	every 2 years

14. Spare parts

14.1 List of spare parts

Set	Spare part	Version	Order number	Image
1	Protective cap	SAV 100025-100050 ND/MD/HD SAV 250025-250050 UHD	on request	
2	Valve seat with sealing ring and O-ring	SAV 100025 ND/MD/HD SAV 250025 UHD	270390	
		SAV 100040 ND/MD/HD SAV 250040 UHD	270391	
		SAV 100050 ND/MD/HD SAV 250050 UHD	270392	
3	ASE with O-ring	SAV 100025 ND	270375	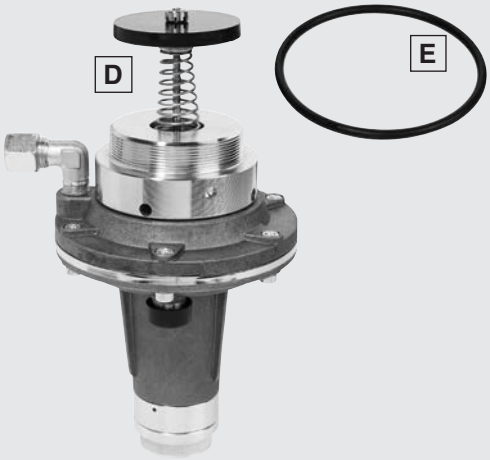
		SAV 100025 MD	270376	
		SAV 100025 HD SAV 250025 UHD	270377	
		SAV 100040 ND	270378	
		SAV 100040 MD	270379	
		SAV 100040 HD SAV 250040 UHD	270380	
		SAV 100050 ND	270381	
		SAV 100050 MD	270382	
		SAV 100050 HD SAV 250050 UHD	270383	

14.2 Storage conditions

Basically, DIN 7716 (guidelines for storage, maintenance and cleaning of rubber products) applies to the storage of diaphragms and O-rings.

The ageing process mainly depends on the following factors:

- Temperature
- Thermal radiation
- Solar radiation
- Humidity
- Relative humidity
- Ozone
- Stress condition of the component

Proper storage

- Storage temperature between 5 °C and 20 °C
- No direct solar radiation
- No direct heat sources in the storage area
- No exposure to ozone
- Tension-free storage
- Storage in polyethylene bags
- Do not exceed the max. storage periods of 5 years

15. Flow diagram

Flow diagram Δp SAV DN 25

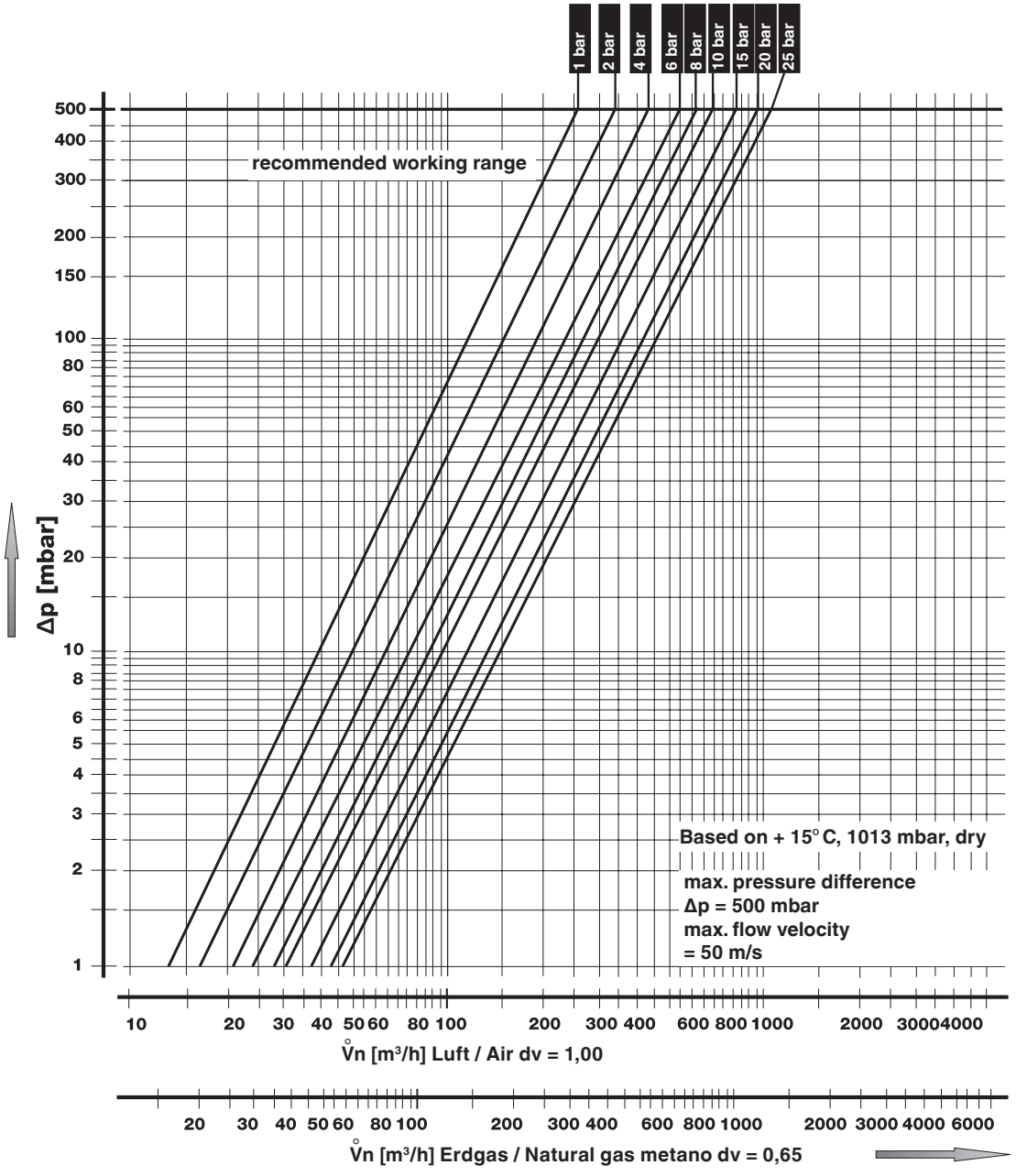

Flow diagram Δp SAV DN 40

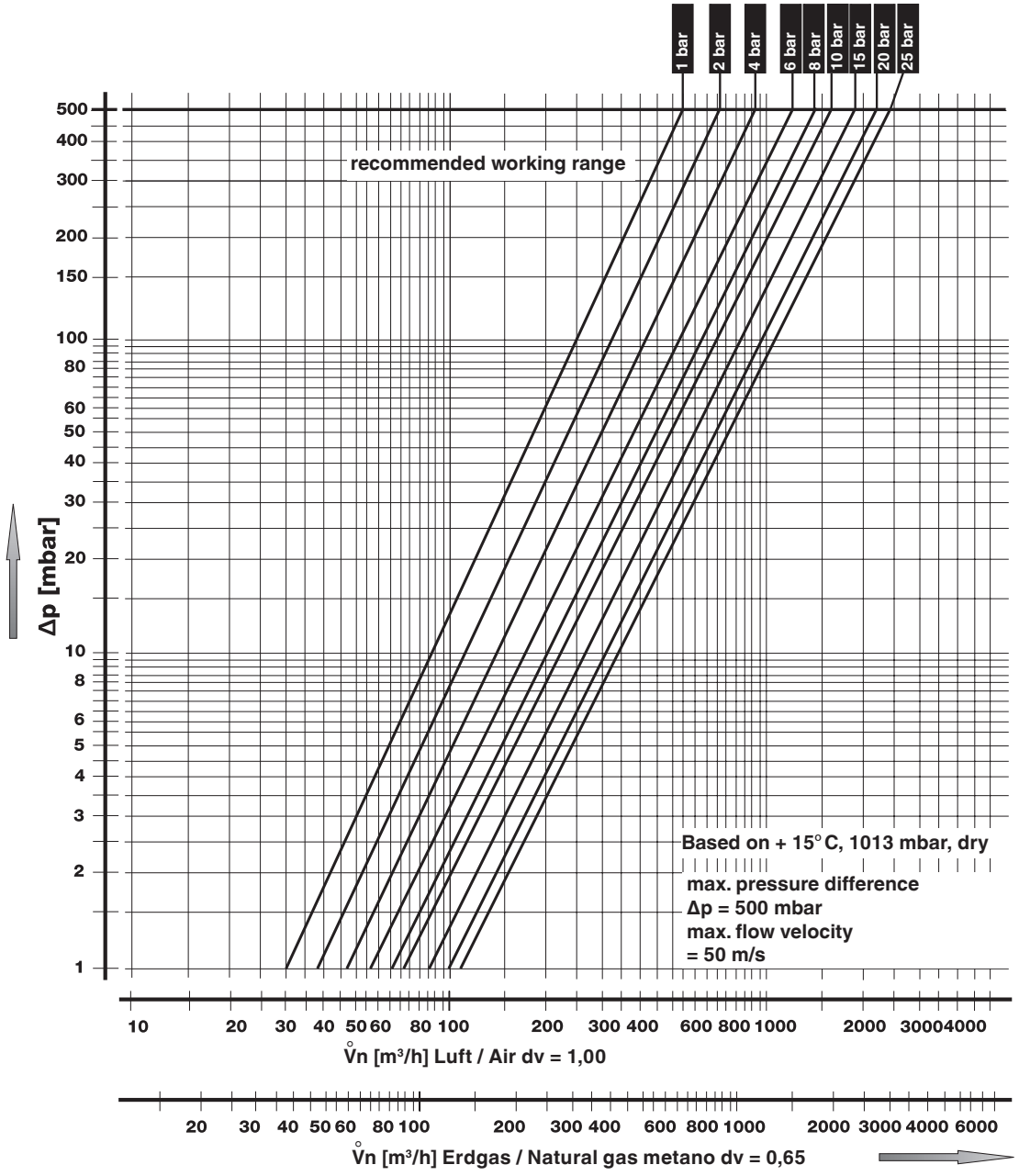

Flow diagram Δp SAV DN 50

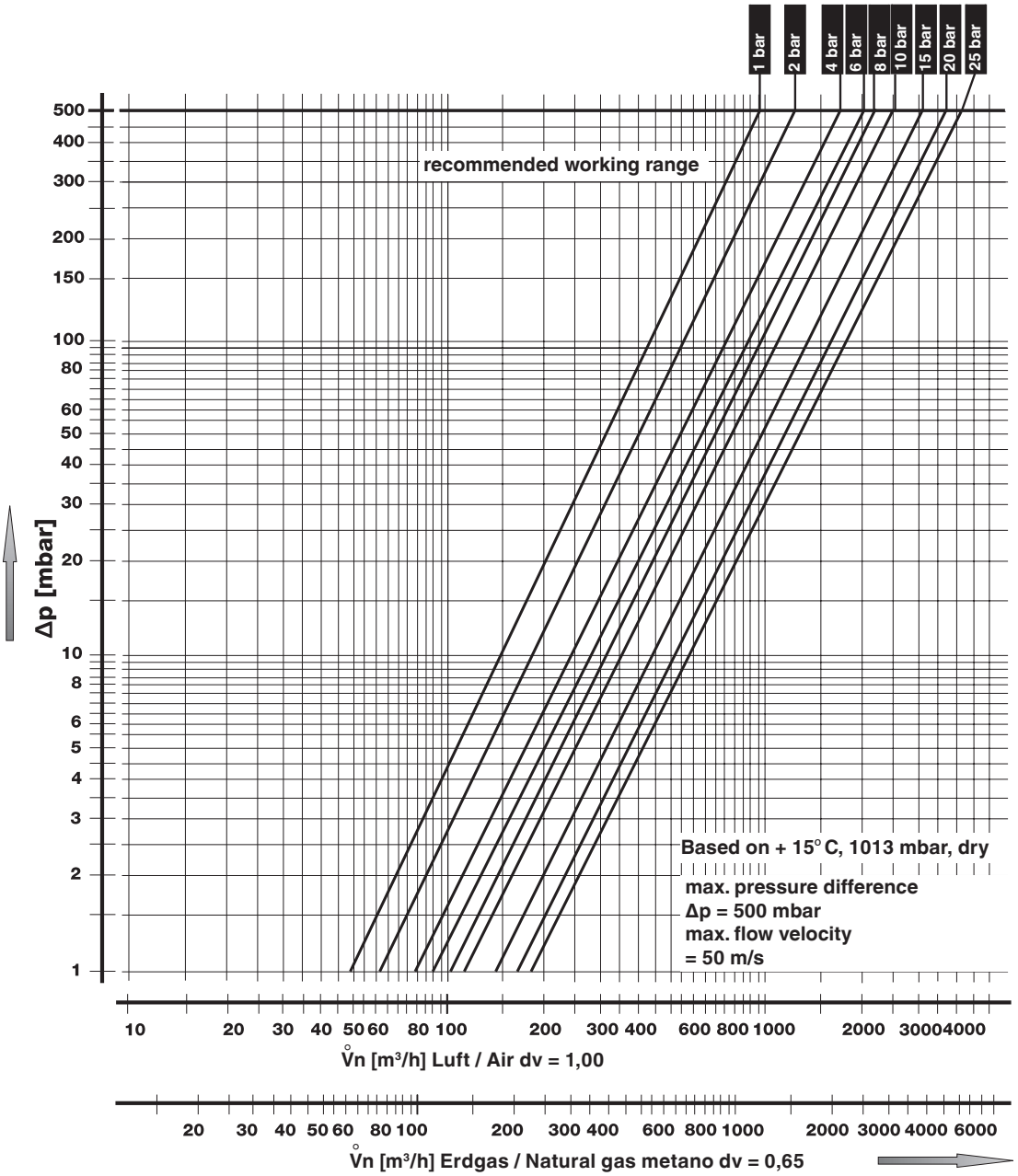

Flow diagram Δp SAV G 1" , G 1½"

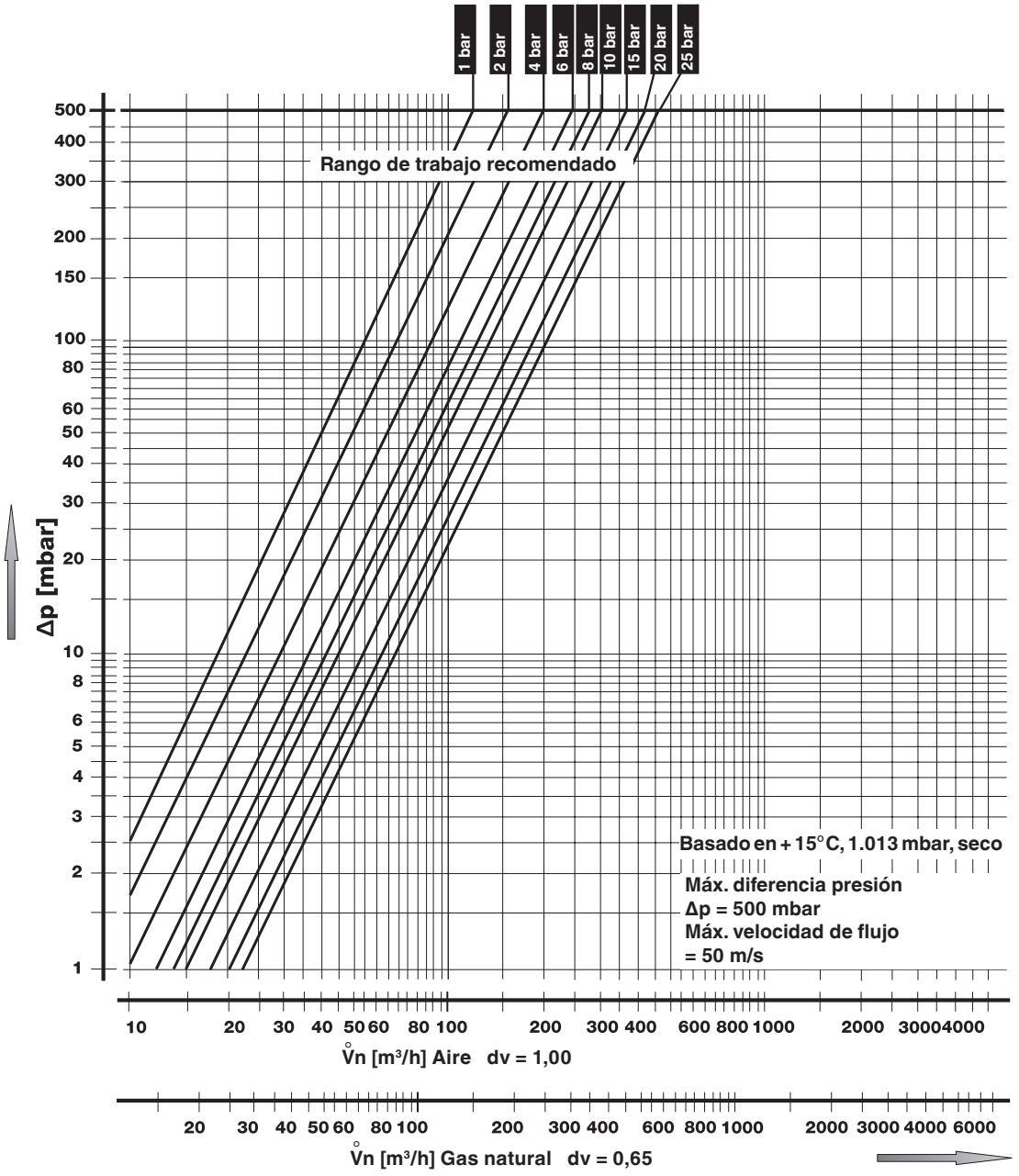

Flow diagram Δp SAV G 2”

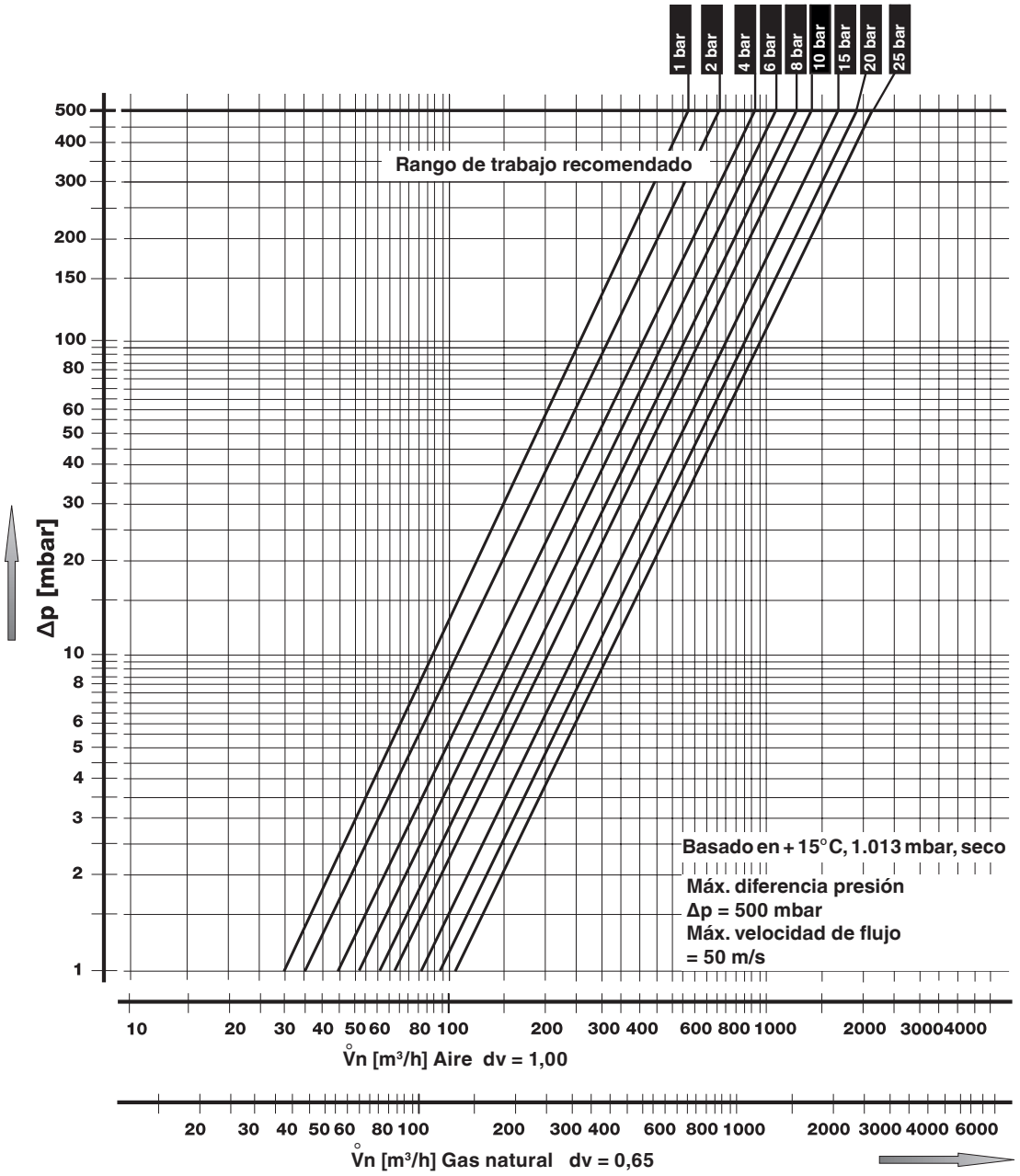

$\dot{V}_{gas\ used} = \dot{V}_{air} \times f$

$f = \sqrt{\dfrac{\text{Air density}}{\text{spec. weight of the gas used}}}$

Type of gas	Density [kg/m³]	dv	f
Natural gas	0.81	0.65	1.24
City gas	0,58	0,47	1,46
LPG	2.08	1.67	0.77
Air	1.24	1.00	1.00



The Pressure Equipment Directive (PED) and the Energy Performance of Buildings Directive (EPBD) require a periodic inspection of heat generators in order to ensure a high degree of efficiency over a long term and, consequently, the least environmental pollution.

It is necessary to replace safety-relevant components after they have reached the end of their useful life:

Sicherheitsrelevante Komponente **Safety relevant component** **Composant relatif à la sécurité** **Componenti rilevanti dal punto di vista della sicurezza**	**Konstruktionsbedingte Lebensdauer** **Designed Lifetime** **Durée de vie prévue** **Durata di vita di progetto**		**Norm** **Standard** **Norme** **Norma**	**Dauerhafte Lagertemperatur** **Durable storage temperature** **Température de stockage permanente** **Temperatura di stoccaggio permanente**
	Zyklenzahl **Operating cycles** **Cycle d'opération** **Numero di cicli di funzionamento di progetto**	**Jahre** **Years** **Année** **Anni**		
Ventilprüfsysteme / Valve proving systems / Systèmes de contrôle de vannes / Sistemi di controllo valvole	250 000	10	EN 1643	0…45 °C 32…113 °F
Gas / Gas / Gaz / Gas Druckwächter / Pressure switch / Manostat / Pressostati	50 000	10	EN 1854	
Luft / Air / Air / Aria Druckwächter / Pressure switch / Manostat / Pressostati	250 000	10	EN 1854	
Gasmangelschalter / Low gas pressure switch / Pressostat gaz basse pression / Pressostati gas di minima pressione	N/A	10	EN 1854	
Feuerungsmanager / Automatic burner control / Dispositif de gestion de chauffage / Gestione bruciatore	250 000	10	EN 298 EN 230	
UV-Flammenfühler[1] Flame detector (UV probes)[1] Capteur de flammes UV[1] Sensore fiamma UV[1]	N/A	10 000 h[3]	---	
Gasdruckregelgeräte[1] Gas pressure regulators[1] Dispositifs de réglage de pression du gaz[1] Regolatori della pressione del gas[1]	N/A	15	EN 88-1 EN 88-2	
Gasventil mit Ventilprüfsystem[2] Gas valve with valve testing system[2] Vanne de gaz avec système de contrôle de vanne[2] Valvola del gas con sistema di controllo valvola[2]	nach erkanntem Fehler after error detection après détection d'erreur dopo segnalazione di errore		EN 1643	
Gasventil ohne Ventilprüfsystem[2] Gas valve without valve testing system[2] Vanne de gaz sans système de contrôle de vanne[2] Valvola del gas senza sistema di controllo valvola[2]	DN ≤ 25 200 000 25 < DN ≤ 80 100 000 80 < DN ≤ 150 50 000	10	EN 161	
Gas-Luft-Verbundsysteme / Gas-air ratio control system / Systèmes combinés gaz/air / Sistemi di miscelazione gas-aria	N/A	10	EN 88-1 EN 12067-2	

[1] Nachlassende Betriebseigenschaften wegen Alterung / Performance decrease due to ageing /
Réduction de performance due au viellissement / Riduzione delle prestazioni dovuta all'invecchiamento
[2] Gasfamilien II, III / Gas families II, III / Familles de gaz II, III / per i gas delle famiglie II, III
[3] Betriebsstunden / Operating hours / Heures de service / Ore di esercizio
N/A nicht anwendbar / not applicable / ne peut pas être utilisé / non può essere usato

Lagerzeiten / Storage times / Périodes de stockage / Tempi di stoccaggio

Lagerzeiten ≤ 1 Jahr verkürzen nicht die konstruktionsbedingte Lebensdauer.
Storage time ≤ 1 year does not reduce the designes lifetime.
Les périodes de stockage ≤ 1 an ne réduisent pas la durée de vie liée à la conception.
I tempi di stoccaggio ≤ 1 anno non riducono la durata di vita legata al design.

DUNGS empfiehlt eine **maximale Lagerzeit von 3 Jahren**.
DUNGS recommends a **maximum storage time of 3 years.**
DUNGS recommande une **durée de stockage maximale de 3 ans**.
DUNGS raccomanda un **tempo massimo di stoccaggio di 3 anni**.

We reserve the right to make modifications in the course of technical development.

DUNGS®
Combustion Controls

DUNGS®
Combustion Controls

Head of office and factory

Karl Dungs GmbH & Co. KG
Karl-Dungs-Platz 1
73660 Urbach,
Germany
Phone +49 7181-804-0
Fax +49 7181-804-166
e-mail: info@dungs.com
Internet: www.dungs.com

MC • Edition 2022.08 • No. 276 524 Rev. -0