GB

DUNGS®
Combustion Controls

Instruction Manual

SAV 100065-100080
SAV 250065-250080

1. Target group

The target group of this manual are specialised gas safety and control technology personnel, trained persons or persons instructed by them.
They can assess the work assigned to them and potential hazards on the basis of their technical training, knowledge and experiences, as well as knowledge of the relevant regulations. In accordance with the accepted rules of industrial safety only these persons are permitted to carry out the installation, start-up, adjustment and servicing of the equipment.



Place this user manual in an easily viewable location in the installation room! Perform work only after the safety instructions in this user manual have been read.

2. Warnings

2.1 General warnings



Follow the accepted rules of industrial safety and the accident prevention regulations must be followed, if necessary take safety measures to ensure the protection of persons.



Execute all settings and setting values subject to compliance with the user manual for the machine connected.

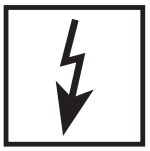

Never perform work when gas pressure or voltage is present. Avoid open fire. Comply with government regulations.



Check the device for transport damage prior to installation.



The device must not be exposed to an open flame. Protection against lightening must be provided.



Pipelines connected must be free of dirt and fouling.



Protection against environmental and climatic influences (corrosion, rain, snow, icing, moisture (e.g. due to condensation)), mould, UV radiation, harmful insects, and toxic, corrosive solutions / liquids (e.g. cutting / cooling fluids) must be ensured. Subject to the installation site, take safety measures when necessary.



The device may only be operated in accordance with the operating conditions specified on the rating plate.



Protect the device against vibrations and mechanical impacts.



The device must not be used in areas with heightened risk of earthquakes.

Explanation of the characters		
1, 2, 3, …	=	Take action consecutively
•	=	Instruction

2.2 Normal use

Normal use of the equipment is deemed to pertain provided the following instructions are followed:

- Use of the equipment in gas transport and gas distribution networks as well as in commercial and industrial systems.
- Use in pressure regulating systems according to EN 12186 and EN 12279.
- Use only with gases of the 1st and 2nd gas family according to EN 437.
- Use only with dry and clean gases, no aggressive media.
- Use only in accordance with the operating conditions specified on the rating plate.
- Use only in good order and condition.
- Malfunctions and faults must be corrected immediately.
- Use only when following the instructions in this user manual and the national regulations.

2.3 Risks in case of misuse

- The equipment is reliable in operation when used normally.
- Personal or consequential material damage, financial damage or environmental damage cannot be ruled out in the event of non-observance of the instructions.
- In the event of misuse or misapplication life and limb of the operator is threatened and serious damage to the device and other material assets is risked as well.

3. EU Declaration of conformity

Produkt / Product Produit / Producto	**SAV 100065-100080 / SAV 250065-250080**	**Safety shut-off valve up to 25 bar**	
Hersteller / Manufacturer Fabricant / El Fabricante	**Karl Dungs GmbH & Co. KG Karl-Dungs-Platz 1 73660 Urbach, Germany**		
bescheinigt hiermit, dass die in dieser Übersicht genannten Produkte einer **EU-Baumusterprüfung (Baumuster)** unterzogen wurden und die wesentlichen Sicherheitsanforderungen der: • **EU-Druckgeräterichtlinie 2014/68/EU** in der gültigen Fassung erfüllen. Bei einer von uns nicht freigegebenen Änderung des Gerätes verliert diese Erklärung ihre Gültigkeit. Der oben beschriebene Gegenstand der Erklärung entspricht den einschlägigen Harmonisierungsrechtsvorschriften der Union. Die alleinige Verantwortung für die Ausstellung dieser Konformitätserklärung trägt der Hersteller.	certifies herewith that the products named in this overview were subjected to an **EU-Type Examination (production type)** and meet the essential safety requirements: • **EU-Pressure Equipment Directive "2014/68/EU"** as amended. In the event of an alteration of the equipment not approved by us this declaration loses its validity. The object of the declaration described above conforms with the relevant Union harmonisation legislation. This declaration of conformity is issued under the sole responsibility of the manufacturer.	certifie par la présente que le produit mentionné dans cette vue d'ensemble a été soumis à **un examen UE de type (type de fabrication)** et qu'il est conforme aux exigences en matières de sécurité des dernières versions en vigueur de : • **Directive européenne relative aux appareils sous pression 2014/68/UE** Ce communiqué n'est plus valable si nous effectuons une modification libre de l'appareil. L'objet décrit ci-dessus de la présente déclaration correspond aux prescriptions légales applicables en matière d'harmonisation de l'Union. Le fabricant porte l'entière responsabilité pour l'établissement de la présente déclaration de conformité.	certifica que los productos mencionados en este resumen han sido sometidos a un **examen UE de tipo (tipo de producción)** y cumplen con los requisitos mínimos de seguridad de: • **Directiva de equipos a presión de la UE 2014/68/UE** en su versión vigente. En caso de una modificación no autorizada por nosotros, esta declaración pierde su validez. El objeto de la declaración descrita anteriormente es conforme a la legislación de armonización pertinente de la Unión. El fabricante es el único responsable de la expedición de esta declaración de conformidad.
Prüfgrundlage der EU-Baumusterprüfung (Baumuster) Specified requirements of the EU-Type Examination (production type) Base d'essai de l'examen UE de type (type de fabrication) Requisitos específicos del examen UE de tipo (tipo de producción))	**DIN EN 14382**		
Gültigkeitsdauer/Bescheinigung Term of validity/attestation Validité/certificat Periodo de validez / Certificado	**2024-08-05 CE-0085CP0255**		
Notifizierte Stelle (EU Baumusterprüfung: Modul B) Notified Body (EU type-examination: Module B) Organisme notifié (Examen de type de l'UE: module B) Organismo notificado (Examen tipo UE: Módulo B)	**DVGW CERT GmbH** Josef-Wirmer-Straße 1-3 D-53123 Bonn, Germany Notified Body number: 0085		
Überwachung des QM-Systems (Modul D) Monitoring of the QM system (module D) Contrôle de la gestion de l'assurance qualité (module D) Supervisión del sistema de calidad y seguridad módulo D)	**TÜV SÜD Industrie Service GmbH** Westendstraße 199 D-80686 München, Germany Notified Body number: 0036		
B. Sc., MBA, Simon P. Dungs Geschäftsführer / Chief Operating Officer Directeur / Gerente Urbach, 2022-08-01			

UK CA

DUNGS®
Combustion Controls

3. Declaration of conformity

Product	**SAV 100065-100080 / SAV 250065-250080**	**Safety shut-off valve up to 25 bar**
Manufacturer	**Karl Dungs GmbH & Co. KG · Karl-Dungs-Platz 1 · D-73660 Urbach/Germany**	

Certifies herewith that the products named in this overview were subjected to a **Type Examination (production type)** and meet the essential safety requirements:

- **The Pressure Equipment Safety Regulations, UKSI 2016:1105 (as amended by UKSI 2019: 969)**

In the event of an alteration of the equipment not approved by us this declaration loses its validity.
The object of the declaration described above conforms with the relevant legislation.
This declaration of conformity is issued under the sole responsibility of the manufacturer.

Specified requirements of the Type Examination (production type)	**DIN EN 14382**
Term of validity	**2032-05-17**
Approved Body	**2016 No. 1105** **TUV SUD BABT Unlimited** Octagon House, Concorde Way, Segensworth North, Fareham, Hampshire, PO15 5RL, United Kingdom Approved Body Number: 0168
Monitoring of the QA system	Conformity process adopted: Module B+D
B.Sc., MBA Simon P. Dungs, Chief Operating Officer Urbach, 2022-08-01	

4. Table of contents

1. Target group 1
2. Warnings 1
2.1 General warnings 1
2.2 Normal use 2
2.3 Risks in case of misuse 2
3. Declaration of conformity 3
4. Table of contents 5
5. List of abbreviations 6
6. Features 7
6.1 Technical data 7
6.2 Nomenclature 7
6.3 Adjustment ranges 8
6.4 Spring selection 8
6.5 Type plate 9
7. Function 10
8. Dimensions 11
9. Assembly / Installation 12
9.1 General instructions 12
9.2 Description of installation 13
9.3 Torques 14
10. Upper / lower adjustment range 15
10.1 Recommended setting values 15
10.2 Spring replacement 16
10.2.1 Replacement of the spring for upper response pressure W_{dso} 16
10.2.2 Replacement of the spring for lower response pressure W_{dsu} 17
11. Startup and shutdown 18
11.1 General instructions 18
11.2 Leak test 18
11.3 Startup / unlocking / checking the setting values 19
11.4 Restarting 21
11.5 Shutdown 21
12. Malfunctions and their causes 21
13. Maintenance 22
13.1 General instructions 22
13.2 Maintenance instructions 23
13.2.1 Replacement of the SAV closing element 23
13.2.2 Preparation 25
13.2.3 Removing the ASE from the housing 25
13.2.4 Installing the ASE on the housing 26
13.3 Tools required 27
13.4 Leak test 28
13.5 Recommended maintenance intervals 29
14. Replacement parts 29
14.1 SAV replacement parts list 30
14.2 Storage conditions 30
15. Flowtables 31
15.1 Flow table for natural gas 31
15.2 Flow table for air 31
15.3 Valve flow coefficient K_G 32

5. List of abbreviations

Abbreviation	Description
AGo	Response pressure group of the upper response pressure
AGu	Response pressure group of the lower response pressure
ASE	Safety shut-off valve (without housing)
K_G	Flow coefficient
DN	Nominal diameter
IS / DS	Integral or variable strength range
Class A	Functional class: The SAV closes if the comparison diaphragm is damaged or the auxiliary power supply has failed
p_d	Regulator output pressure
p_{do}	Upper response pressure
p_{du}	Lower response pressure
p_{max}	Maximum operating pressure
PN	Nominal flange pressure
PS	Maximum permissible pressure
SAV	Safety shut-off valve
SBV	Safety pressure relief valve
SN	Serial number
SW	Width across flats
W_{do}	Adjustment range for the upper response pressure by use of the adjusting springs available
W_{du}	Adjustment range for the lower response pressure by use of the adjusting springs available
W_{dso}	Specific adjustment range of the adjusting spring installed for the upper response pressure
W_{dsu}	Specific adjustment range of the adjusting spring installed for the lower response pressure

6. Features

6.1 Technical data

Technical data	SAV …
Device	**Safety shut-off valve according to EN 14382, class A**
Type	SAV 100… IS / SAV 250… DS
Response time	< 2 s
Type of gas	Family 1+2+3
Nominal diameters Flange	Connecting flanges PN 25 according to EN 1092-1 or ANSI 150 lbs (B16.5) DN 65 80 NPS 2.5" 3"
Input pressure	SAV 100… 10 bar (1 000 kPa) SAV 250… 25 bar (2 500 kPa)*
Lower adjustment range W_{du}	35 mbar to 3 000 mbar
Upper adjustment range W_{do}	180 mbar to 5 000 mbar
Materials	Main housing: Cast iron GGG 50 Diaphragm housing: Aluminium Diaphragms: NBR
Ambient temperature	-20 °C to +60 °C

* 19 bar (1 900 kPa) with flanges ANSI 150

6.2 Nomenclature

Using the SAV 100065 MD as an example	SAV		100	065	MD	ANSI
Type	**Safety shut-off valve**					
MOP	**100 …**	**10 000 mbar (1 000 kPa)**				
	250 …	**25 000 mbar (2 500 kPa)**				
Nominal diameter	065	DN 65				
	080	DN 80				
Output pressure ranges	MD	Medium pressure				
	UHD	Ultra high pressure / high pressure				
Flange type		with standard PN 25				
	ANSI	with flanges ANSI 150 lbs				

6.3 Adjustment ranges

Type	Connection	Version	Item number	Lower switching point		Upper switching point	
				W_{du}	AG	W_{do}	AG
SAV 100065 MD	DN 65	MD	287898	35-400 mbar	AG 10	180-800 mbar	AG 10
SAV 250065 UHD	DN 65	UHD	279386	150-3 000 mbar	AG 5	500-5 000 mbar	AG 5
SAV 100080 MD	DN 80	MD	287900	35-400 mbar	AG 10	180-800 mbar	AG 10
SAV 250080 UHD	DN 80	UHD	279387	150-3 000 mbar	AG 5	500-5 000 mbar	AG 5
SAV 100065 MD ANSI	ANSI 2.½"	MD	287902	35-400 mbar	AG 10	180-800 mbar	AG 10
SAV 250065 UHD ANSI	ANSI 2.½"	UHD	287903	150-3 000 mbar	AG 5	500-5 000 mbar	AG 5
SAV 100080 MD ANSI	ANSI 3"	MD	287905	35-400 mbar	AG 10	180-800 mbar	AG 10
SAV 250080 UHD ANSI	ANSI 3"	UHD	287906	150-3 000 mbar	AG 5	500-5 000 mbar	AG 5

6.4 Spring selection

Specific adjustment range, underpressure W_{dsu}						
Spring colour	Item number	Wire diameter [mm]	Length [mm]	Diameter [mm]	Setpoint range [mbar]	
					MD	UHD
Blue	270356	2.0	55	12.3	35-110	
Black	270357	2.3	55	12.3	50-250	
Purple	270358	2.5	55	12.3	80-400	150-500
Orange	270359	2.8	55	12.3		300-1 000
Silver	270360	3.0	60	15.0		800-1 400
Pink	276126	3.5	60	15.0		1 200-3 000

Specific adjustment range, overpressure W_{dso}						
Spring colour	Item number	Wire diameter [mm]	Length [mm]	Diameter [mm]	Setpoint range [mbar]	
					MD	UHD
Green	270366	2.5	60	30.0	180-290	
Red	270367	2.7	60	30.0	230-370	
Yellow	270368	3.2	60	30.0	300-500	
Blue	270369	3.5	60	30.0	400-800	500-1 000
Black	270370	3.7	60	30.0		700-1 300
Purple	270371	4.0	60	30.0		1 000-1 800
Orange	270372	4.5	60	30.0		1 300-2 500
Pink	270373	4.8	60	30.0		1 800-3 500
White	271115	5.0	60	30.0		2 500-5 000

6.5 Type plate

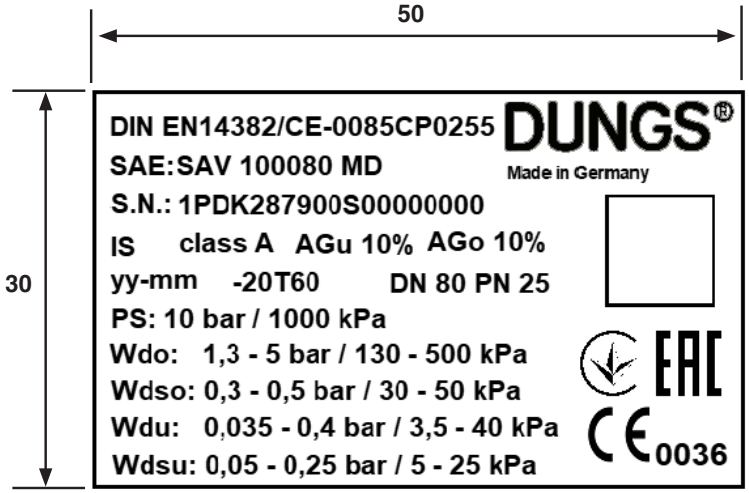

Abbreviation	Description
AGo	Response pressure group of the upper response pressure
AGu	Response pressure group of the lower response pressure
ASE	Safety shut-off valve (without housing)
DN	Nominal diameter
IS / DS	Integral or variable strength range
-20T60	Operating temperature range
Class A	Functional class: The SAV closes if the comparison diaphragm is damaged or the auxiliary power supply has failed
p_{max}	Maximum operating pressure
PN	Nominal flange pressure
PS	Maximum permissible pressure
SAV	Safety shut-off valve
SBV	Safety pressure relief valve
SN	Serial number
SW	Width across flats
W_{do}	Adjustment range for the upper response pressure by use of the adjusting springs available
W_{du}	Adjustment range for the lower response pressure by use of the adjusting springs available
W_{dso}	Specific adjustment range of the adjusting spring installed for the upper response pressure
W_{dsu}	Specific adjustment range of the adjusting spring installed for the lower response pressure

7. Function

The SAV protects downstream fittings or lines against pressures that are too high or too low. Immediately the pre-set trip pressure falls below or exceeds a limit due to a fault, it interrupts the gas flow automatically. Under normal operating conditions the SAV is open.
If the output side of the gas pressure regulator and / or the fittings and devices of the succeeding gas line section, including its equipment up to the gas-consuming device, are not designed for the highest supply pressure (input pressure to the gas pressure regulator in case of an error), an SAV must be installed in order to shut the gas supply down before the gas pressure becomes too high.
The SAV complies with the requirements of EN 14382 as a safety shut-off valve.

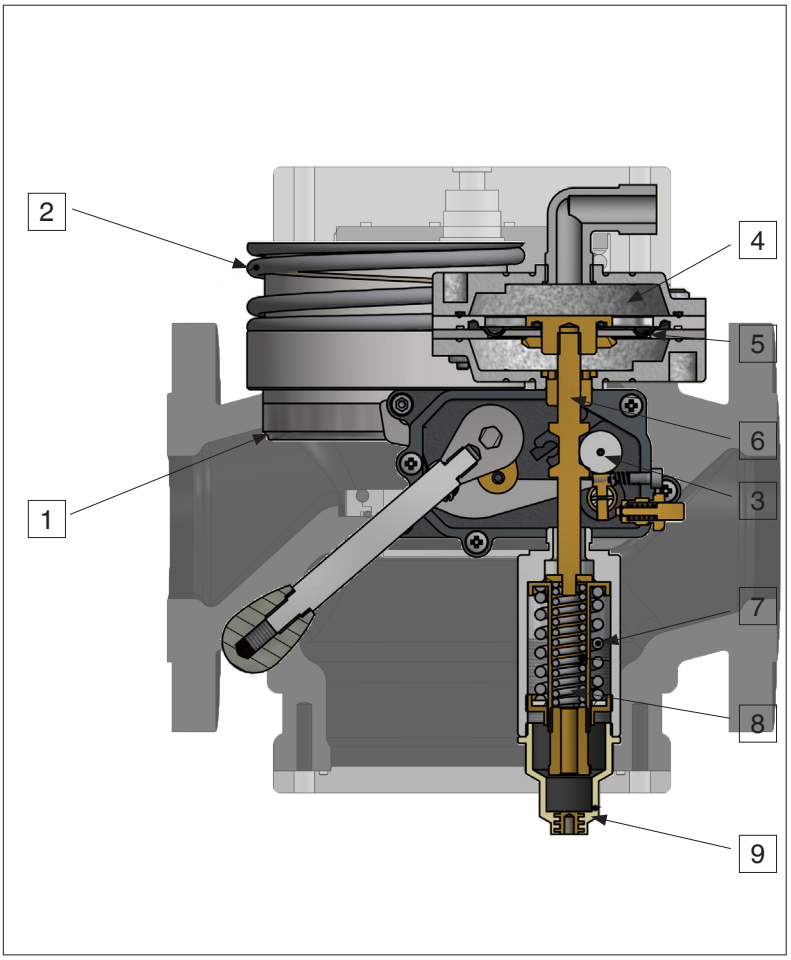

Main components
1 Regulating cup sleeve
2 Closing spring
3 Trigger mechanism
4 Chamber with the pressure to be monitored
5 Working diaphragm
6 Push rod
7 Setpoint spring for p_{do}
8 Setpoint spring for p_{du}
9 Protective cap

Function
Chamber **4** is connected to the output pressure via a pulse line.
The pressure to be controlled acts on the working diaphragm **5**. The force of setpoint springs **7** and **8** acts as a counterforce.
In case of an unbalance of forces (overpressure or underpressure) the SAV is actuated and the gas supply is blocked.

8. Dimensions

SAV …

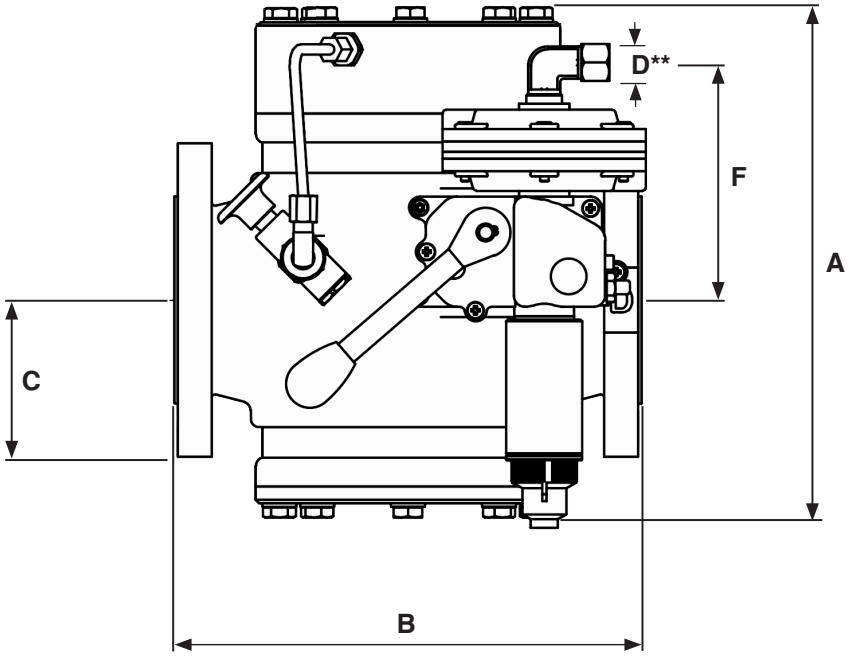

** Ermeto screw connection 12L:
GE 12 - ½ with screw connection M16
for pipes 12x1.5 d

Type	Item number		$p_{max.}$ [bar / kPa]	DN	Dimensions [mm]					Weight [kg]
	DN	NPS			A	B	C	D	F	
SAV 100065 MD	287898	287902	10 / 1 000	65	300	276	135	12x1.5	138	35.1
SAV 250065 UHD	279386	287903	25 / 2 500	65	300	276	135	12x1.5	142	35.1
SAV 100080 MD	287900	287905	10 / 1 000	80	300	298	135	12x1.5	138	37.9
SAV 250080 UHD	279387	287906	25 / 2 500	80	300	298	135	12x1.5	142	37.9

9. Assembly / Installation

9.1 General instructions



• Installation only in accordance with applicable policies and subject to compliance with local regulations, obtain permits required if necessary.
• Install the device in a building or enclosure, no outdoor installation absent appropriate safety measures!

- **Fit the working range with conventional safeguards.**
- **The lifting gear used must be suited for the loads to be lifted.**
- **Provide sufficient installation space for maintenance and cleaning.**
- **The installation of a filter with a pore size ≤ 50 µm upstream of the regulator is recommended.**
- **The installation must not impair the operation of other components.**

Check before installing!

- **The in- and output side shut-off valves are closed.**
- The line is combustion gas free.
- Prevent a gas / air mixture: Monitor the room atmosphere for leaking gas on an ongoing basis using suitable gas concentration testers.
- Ensure electrically conductive bridging.
  Prevent touch voltage and ignitable spark discharge.
- The rating plate's performance data agree with the order data.
- Flanges on the in- and output side of the connecting pipeline are parallel.
- The sealing surfaces of the flanges are undamaged and clean.
- The maximum input pressure of the system is less than the maximum permissible pressure of the regulator.
- Remove the connecting flanges' protective caps – if present.
- Maintain minimum clearances for adjustment.
- The input side pipeline is free of dirt and water.

Bear in mind during installation!

- **Tension-free installation.**
- Tighten screws crosswise.
- Observe tightening torques.
- Lay the air feed and extraction lines separately.
- Route the air feed and extraction lines into the open. The gas has to be able to escape into safe surroundings.
- The pulse lines must non-isolatable.
- The distance specified between the measuring points of the pulse lines must be observed.
- Pay attention to the flow direction (arrow) on the housing.



9.2 Description of installation

- The installation must be carried according to the installation scheme specified below, unless deviations required by regulations.
- Install the safety shutoff valve in the flow direction (arrow/housing).
- Design a straight stablisation section with the equal diameter.
- Make sure that the impulse tapping at the stablisation section is clean and free from burrs. Distance > 5 x DN
- Maximum flow velocity in the stablisation section: ≤ 30 m/s.
- Use steel pipe impulse lines:
  For versions using Ermeto screw connection 12 L: GE 12 - ¼, use D= 12 x 1.5
  For versions using fitting p/n 267856, use ½" tubing
- Avoid accumulation of condensate: install the impulse lines with a gradient.

Installation layout

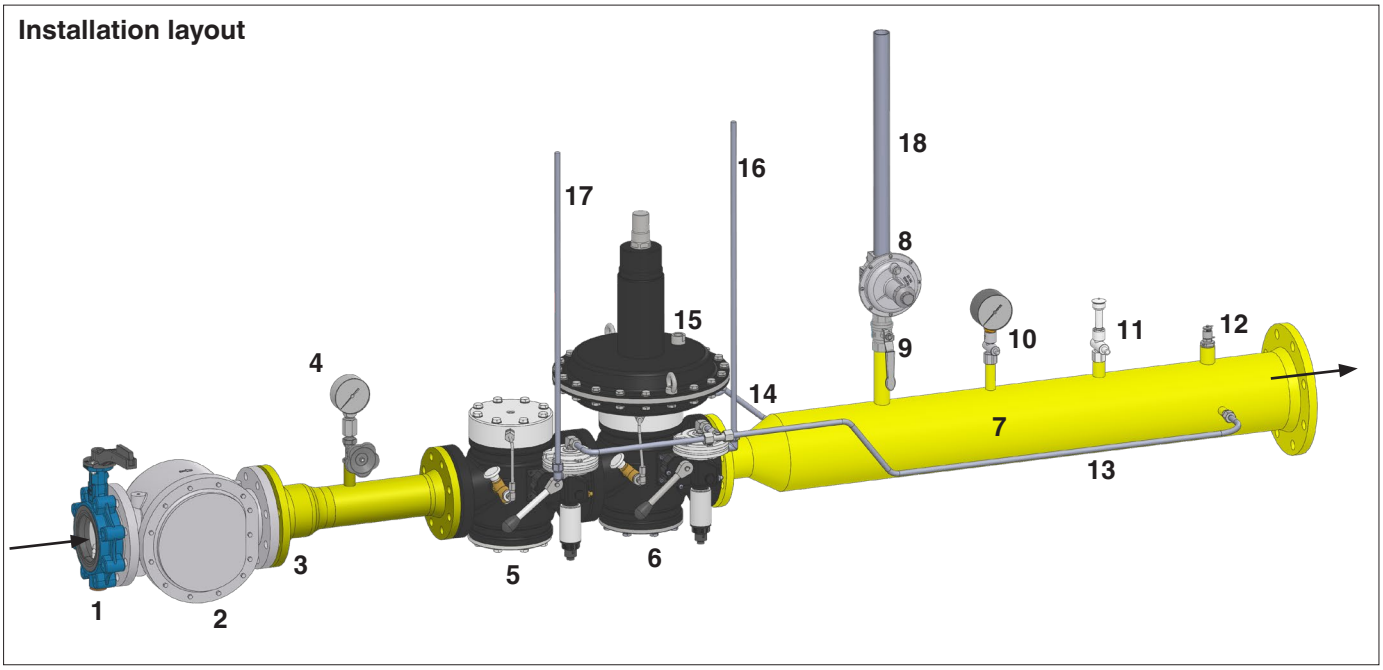

Item	Designation
1	Input side shut-off valve (e.g. ball valve or shut-off flap)
2	Filter
3	Welded part
4	Input side manometer
5	SAV
6	Regulator with integrated SAV
7	Stabilisation section
8	FRSBV
9	Ball valve
10	Output side manometer
11	Test burner
12	Venting ball valve
13	Pulse tap, SAV regulator + stand-alone SAV
14	Pulse tap, regulator
15	Vent connection, regulator
16	Vent connection, regulator SAV
17	Vent connection, stand-alone SAV
18	Outlet connection FRSBV

Installation position

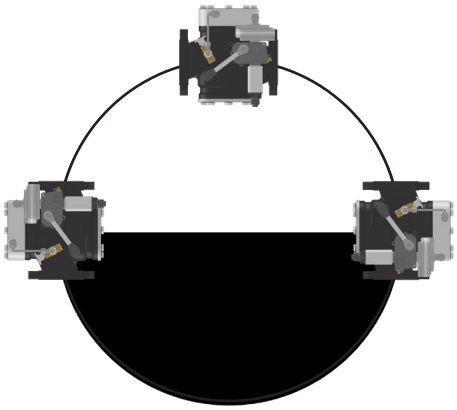

9.3 Torques



Use suitable tools!
Tighten screws crosswise!

Do not use the device as a lever!

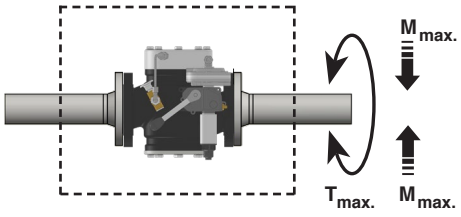

DN	--	--	--	25	40	50	65	80	100	125	150
Rp	⅜	½	¾	1	1½	2	2½	--	--	--	--
$M_{max.}$ [Nm] t 10 s	70	105	225	340	610	110	1 600	2 400	5 000	6 000	7 600
$T_{max.}$ [Nm] t 10 s	35	50	85	125	200	250	325	400	--	--	--

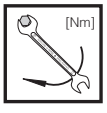

Max. torque of system accessories									
M… / G…	M 4	M 5	M 6	M 8	M 10	G⅛	G¼	G½	G¾
$M_{max.}$ [Nm] t 10 s	2.5 Nm	5 Nm	7 Nm	15 Nm	40 Nm	5 Nm	7 Nm	10 Nm	15 Nm



Max. torque flanged joint		
Stud bolt	M12x55 (EN 13611)	M16x65 (DIN 939)
$M_{max.}$ [Nm] t 10 s	30 Nm	60 Nm

10. Upper / lower adjustment range

Setting value for shutdown at overpressure p_{do}
1. Remove protective cap **A**.
2. Turn outer setscrew **B** with socket spanner **SW 22 mm**.
3. Turning clockwise:
   Increasing (+) the upper shutdown pressure p_{do}.
4. Turning anti-clockwise:
   Decreasing (-) the upper shutdown pressure p_{do}.
5. After the adjustment: Screw protective cap **A** back on.

Setting value for shutdown at underpressure p_{du}
1. Remove protective cap **A**.
2. Turn inner setscrew **C** with socket spanner **SW 17 mm**.
3. Turning clockwise:
   Increasing (+) the lower shutdown pressure p_{du}.
4. Turning anti-clockwise:
   Decreasing (-) the lower shutdown pressure p_{du}.
5. After the adjustment: Screw protective cap **A** back on.

Attention: The setting for the lower trigger affects the setting value for the upper trigger. Adjust the trigger at underpressure first.

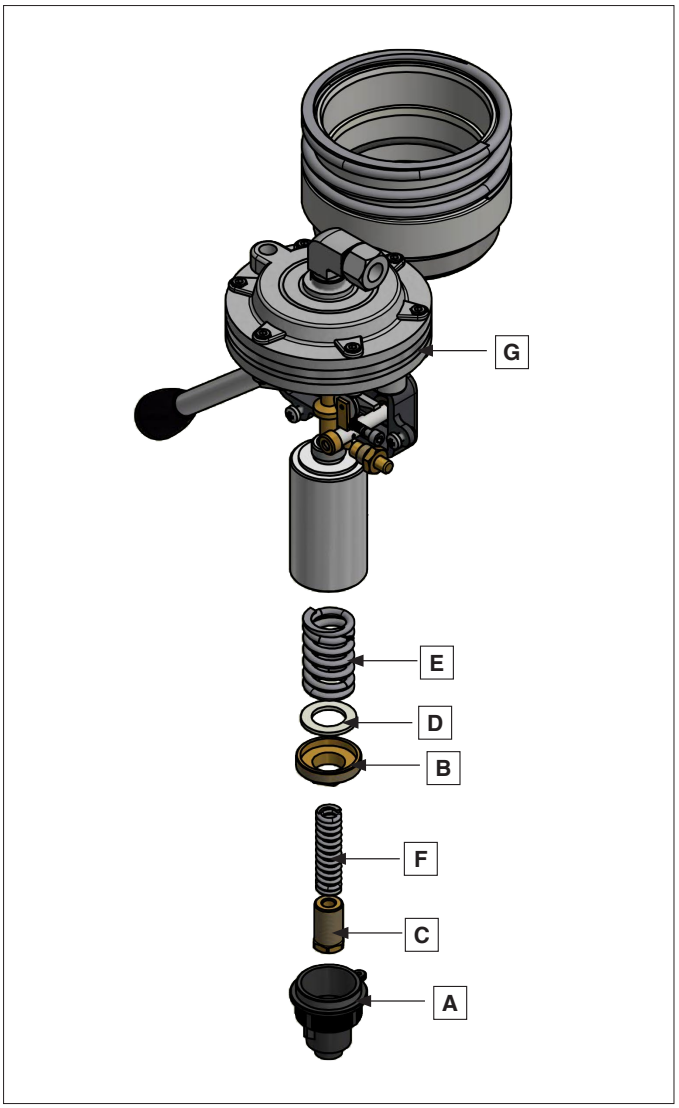

10.1 Recommended setting values

Prevent the pressure regulator and safety shut-off valve from interacting.	
Calculation of the recommended setting values subject to the regulator output pressure p_d	• The SAV must lock on reaching the 1.1x max. system-specific operating pressure. • The SAV's setting values have to be defined taking the pressure regulator's setting values and tolerances into account. • The tolerances and setting values of additional safety equipment need to be considered when adjusting the SAV. • The SAV must not actuate as a result of a safety or normal shutdown of downstream shut-off valves. The upper shutdown pressure must be determined accordingly.
$p_d \leq 100$ mbar $p_{do} = p_d + 50$ mbar	
100 mbar < $p_d \leq 300$ mbar $p_{do} > p_d + 150$ mbar	
$p_d > 300$ mbar $p_{do} > p_d \times 1.5$	

10.2 Spring replacement

1

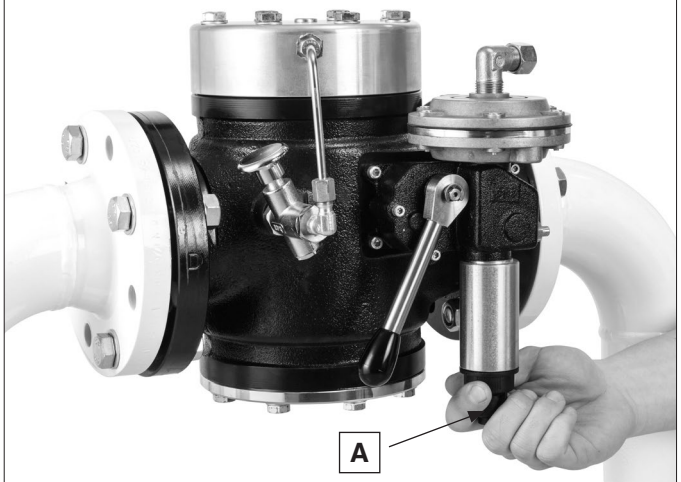

Remove protective cap **A**.

10.2.1 Replacement of the spring for upper response pressure p_{do}

1

Unscrew setscrew **B** with socket spanner **SW 22 mm** from spring dome **G**.



2

1. Remove spring **E** from the spring dome **G**.
2. Insert a new spring.
3. Screw setscrew **B** and washer **D** in with socket spanner **SW 22 mm** until the pre-tension required in the spring dome is reached.



10.2.2 Replacement of the spring for lower response pressure p_{du}

1

1. Remove setscrew **C** with spanner wrench **SW 17 mm** from the inner spring dome **H**.
2. Remove spring **F** from the spring dome.
3. Insert a new spring.
4. Screw setscrew **C** in with spanner wrench **SW 17 mm** until the pre-tension required in the spring dome **H** is reached.



11. Startup and shutdown

11.1 General instructions

Prior to startup

- **The rating plate's performance data agree with the order data.**
- **Prevent explosive gas / air mixture. Monitor the room atmosphere for leaking gas on an ongoing basis using suitable gas concentration testers.**
- **Only operate the device if all safeguards are fully functional.**
- **Only qualified personnel are permitted to implement the startup.**

11.2 Leakage test

Before commissioning the device, a test for internal and external leakages must be carried out.

1. Test gases for the leakage test: Use air or inert gases.
2. Upstream and downstream shutoff valves must be closed.
3. Release all pressure from the test section. Check the presence of gas and safely release to the atmosphere.
4. If test pressure > blow-off pressure SBV: block the line upstream of the SBV.
5. Connect the test section to the test device.
6. Test pressure: 1.1 x system-specific operating pressure Maximum PS of the device (SAV 100... 10 bar/SAV 60... 6 bar). If different pressure ratings of the system must be taken into account. If a relief valve (SBV) is installed in the test section, either the test pressure > SBV relief valve pressure setting or block the line upstream of the SBV and test at 1.1 x system-specific operating pressure maximum PS of the device.
7. Observe the waiting time necessary for the pressure compensation (pressure equilibrium) according to the system-specific volumes. A minimum of one minute is required to reach pressure equilibrium.

External leakage test

8. Use a suitable leak detection spray on the device.
9. Monitor the foam formation.

Internal tightness test for SAV only

10. Remove the pressure in the test section downstream of the SAV and verify that SAV is closed.
11. Monitor the increase in pressure on the outlet side: pressure gauge accuracy 0.1 mbar. The SAV passes the test if there is no pressure increase for five minutes.
12. Once the leakage test has been carried out, open the shutoff valve upstream of the SBV, if installed.
13. Release pressure in the test section, if test failed.

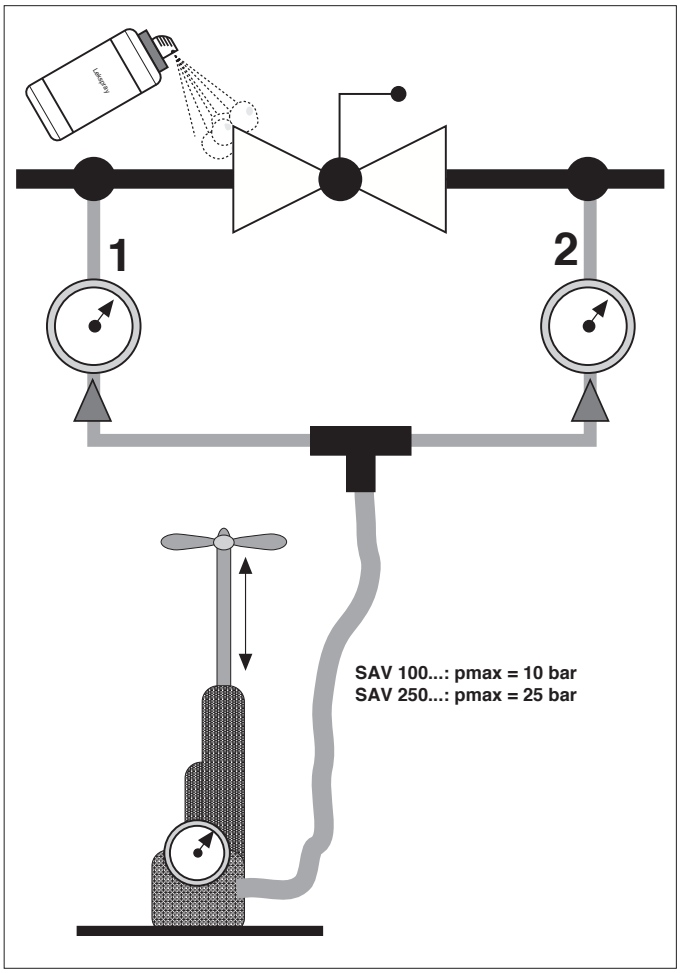

11.3 Startup / unlocking / checking the setting values

1. Slowly open the shutoff valve on the inlet side per 12.2 “Initial applying pressure during commissioning, recommissioning or testing”. The ball valve on the outlet side remains closed.

2. Monitor the pressure rise on the pressure gauge on the inlet side upstream of the device.

3. SAV resettimg:

3.1



Press the bypass button valve. Check increase in downstream pressure until setpoint pressure is achieved. Then stop pressing bypass buton valve.

3.2



Operate hand lever to open the valve.

4.0 Venting the test section to atmosphere

4.1 If venting fuel gas to test the setting of the FRM or SAV, use a manual valve connected to a suitable hose to release the fuel gas to a safe location. Or, if a relief valve is installed, it might be possible to use it to vent some or all of the fuel gas for proper testing. Do not use a test burner for venting, and see 12.1 General information regarding risks of venting into spaces.

4.2 Pressurizing Test Section

4.3 When the test section must be completely filled with fuel gas: make sure that the test section is free from air by using a test burner. Close the stop-cock on the venting hose.

5.0 Initial Checking of the FRM outlet pressure

5.1 Before initially starting of the equipment, an initial check of the FRM outlet pressure setting shall be done.

5.2 To check the outlet pressure setting of the regulator:

5.3 Partially open a manual valve connected to the hose in 4.0 above just enough to generate gas flow, and check the set value (outlet pressure) using a pressure gauge. If necessary, correctly adjust the setting according to section 11.1 Regulator Setting.

5.4 Close the manual valve, remove the hose, insert the sealing cap A.

6.0 Checking upper(over) response pressure p_{do}

6.1 SBV installation on the outlet side: block the line upstream of the SBV.

6.2 Create bypass around the FRM (see below).

6.3 Connect a line between the inlet and outlet side of FRM using manually operated test/purge valves.

6.4 With both valves closed, slowly open the upstream valve to charge the bypass line.

6.5 Slowly open the downstream valve in the bypass line and monitor the increase of pressure on the outlet side using a pressure gauge.

6.6 Avoid inadmissible high pressure on the outlet side. Stop applying pressure immediately after the SAV has tripped.

6.7 Once the SAV trips, read the upper (over) response pressure on the pressure gauge on the outlet side.

6.8 If necessary, correct the SAV set points according to the specifications in section 11.2 “SAV setting” and check it again.

7.0 Check of the lower (under) response pressure p_{du} setting.

7.1 Release the pressure in the test section on the outlet side until the operating pressure is reached.

7.2 Check if gas is available and release it safely in the atmosphere.

7.3 Monitor pressure drop on the pressure gauge.

7.4 Unlock / reset SAV, if SAV is tripped.
See “3. SAV resetting” in section 12.4.

7.5 Check that all test/purge valves are closed.

7.6 Create a means to safely release the fuel gas in downstream the SAV into the atmosphere. See figures below and reference “4.0 Venting the test section to atmosphere” in section 12.3.

7.7 Slowly vent the fuel gas per “4.0 Venting the test section to atmosphere”. After the SAV trips, read the lower (under) response pressure on the pressure gauge.

7.8 Close the vent valve, remove the hose, insert the sealing cap.

7.9 Slowly open the shut-off valve on the inlet side.

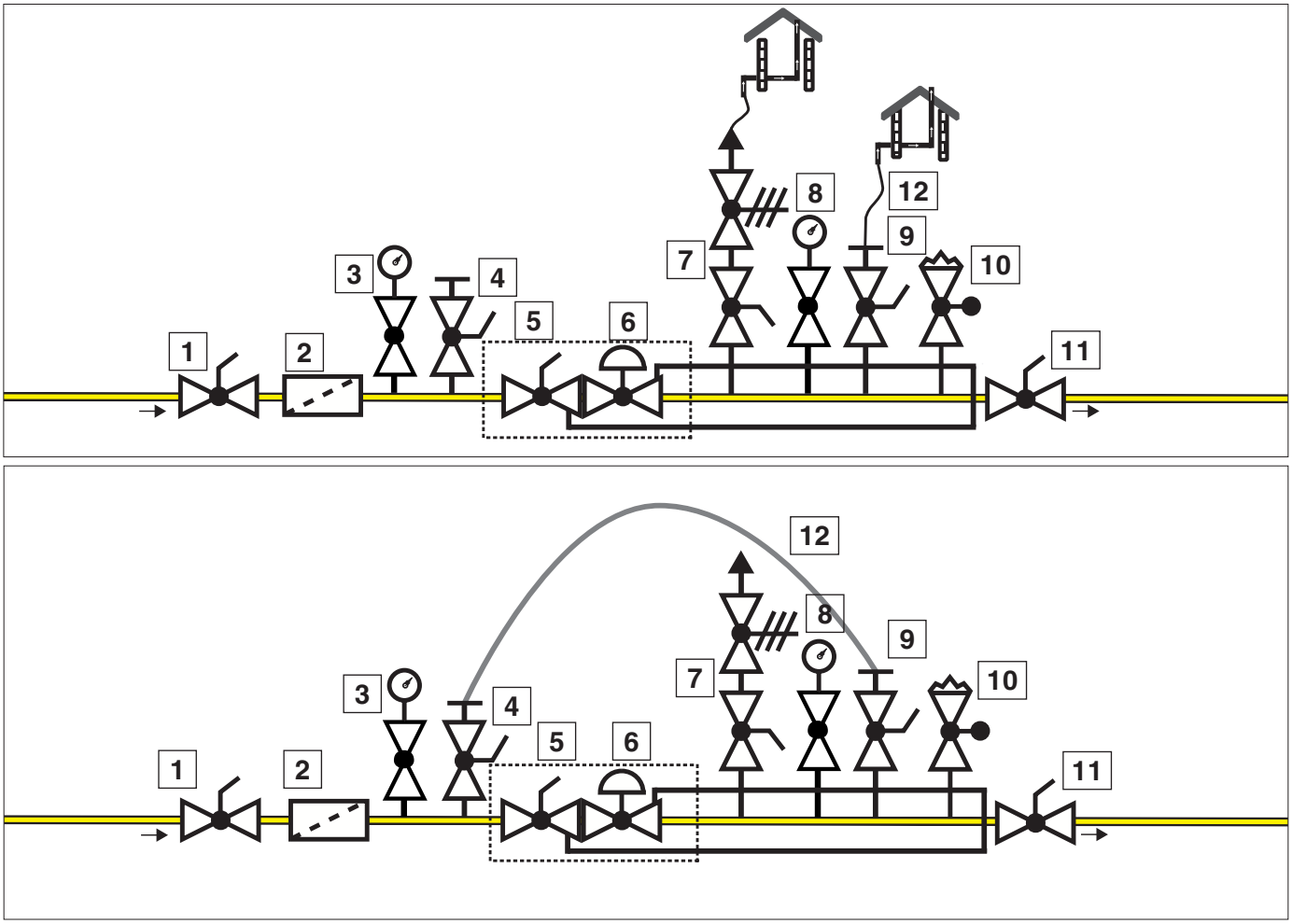

Item	Designation
1	One-way shut-off valve
2	Filter
3	Pressure gauge with push-button cock
4	Ventilation ball valve
5	SAV
6	Pressure regulator

Item	Designation
7	SBV with shut-off valve
8	Pressure gauge with push-button cock
9	Ventilation ball valve
10	Test burner
11	Shut-off valve on the output side
12	Hose

11.4 Restarting

1. Close the shut-off valve upstream of the bypass.
2. Remove the hose.
3. Open the ball valve upstream of SBV.
4. Slowly open the SAV, see section 11.3.
5. Once SAV is completely open, open the shut-off valve on the output side.

11.5 Shutdown

1. Slowly close the shut-off valve on the output side.
2. Slowly close the shut-off valve on the input side.
3. Check the gas and safely release it into the open.

12. Malfunctions and their causes



- **Repair work on the device may only be performed by authorised technical specialist staff.**
- **Only use original replacement parts.**

Fault on the SAV	Possible cause	Troubleshooting
The SAV cannot be opened / unlocked.	The pulse line is not connected.	Connect the pulse line.
	The pulse line is clogged.	Clean the pulse line.
	The pulse line is leaky.	Seal the pulse line.
	The pulse line is damaged.	Replace the pulse line.
	The pulse pressure is outside the adjustment range.	Adjust the SAV's shutdown pressure or the output pressure.
	The adjusting springs are not suitable for the application.	Replace the adjusting springs.
	The SAV's adjustment range is outside the output pressure.	Replace the SAV or the ASE.
The SAV does not switch on or respond.	The pulse line is not installed.	Install / connect the pulse line.
	The pulse line is clogged.	Clean the pulse line.
	The pulse line is leaky.	Seal the pulse line.
	The pulse line is damaged.	Replace the pulse line.
	The pulse pressure is outside the adjustment range.	Adjust the SAV's shutdown pressure.
	The adjusting springs are not suitable for the application.	Replace the adjusting springs.
The SAV switches on, but does not seal.	The valve disc is damaged or worn out.	Replace the ASE or have repaired by DUNGS.
	The valve seat is damaged.	Replace the valve seat.
	The movable parts are fouled with foreign particles.	Clean the movable parts or replace the ASE.
	The drive is damaged.	Replace the ASE.
	The O-ring is damaged.	Replace the O-ring or the ASE.
The SAV leaks into the open.	The working diaphragm is damaged.	Replace the working diaphragm or the ASE.
	The sealing ring between the ASE and the SAV's housing is damaged.	Replace the sealing ring or the ASE.
	The O-ring in the ASE is damaged.	Replace the O-ring or the ASE.

13. Maintenance

13.1 General instructions



• The Pressure Equipment Directive (PED) requires a regular inspection of the equipment to guarantee the following over the long term: safety and function of the device, high degree of efficiency and minimum environmental impact as a result.
• Maintenance must be carried out in accordance with applicable policies and in compliance with current local regulations.
• Maintenance work on the device may only be performed by authorised specialist staff.

- **Adhere to the maintenance intervals specified.**
- **The risks in case of an escape of flammable or noxious gases into the atmosphere have to be assessed.**
- **Always use new seals after upgrading or replacing parts.**
- **Only use original replacement parts.**
- **Do not use alcohol-based or solvent-containing cleaning solutions for cleaning.**

Prior to starting maintenance work

- The in- and output side shut-off valves are closed.
- The line is unstressed and combustion gas free.
- Prevent a gas / air mixture:
  Monitor the room atmosphere for leaking gas on an ongoing basis using suitable gas concentration testers.
- The SAV is in the closed position.
- Original replacement parts available.

13.2 Maintenance instructions

13.2.1 Preparation

1

Make sure that the SAV is closed by pressing the trigger button.



2

1. Detach and remove the pulse and vent lines.
2. Remove protective cap **L**.
3. Undo setscrews **J and K** to release the adjusting springs.

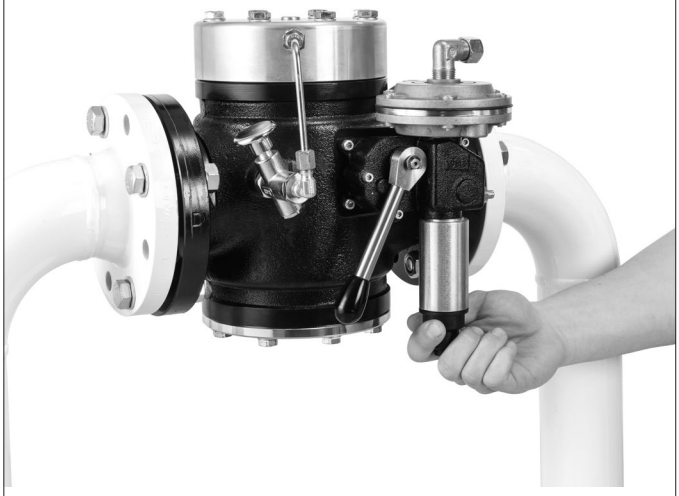

13.2.2 Replacement of the SAV closing element

1



Unscrew the bypass line with a spanner **SW 14 mm**.

2



Remove the bypass line.

3

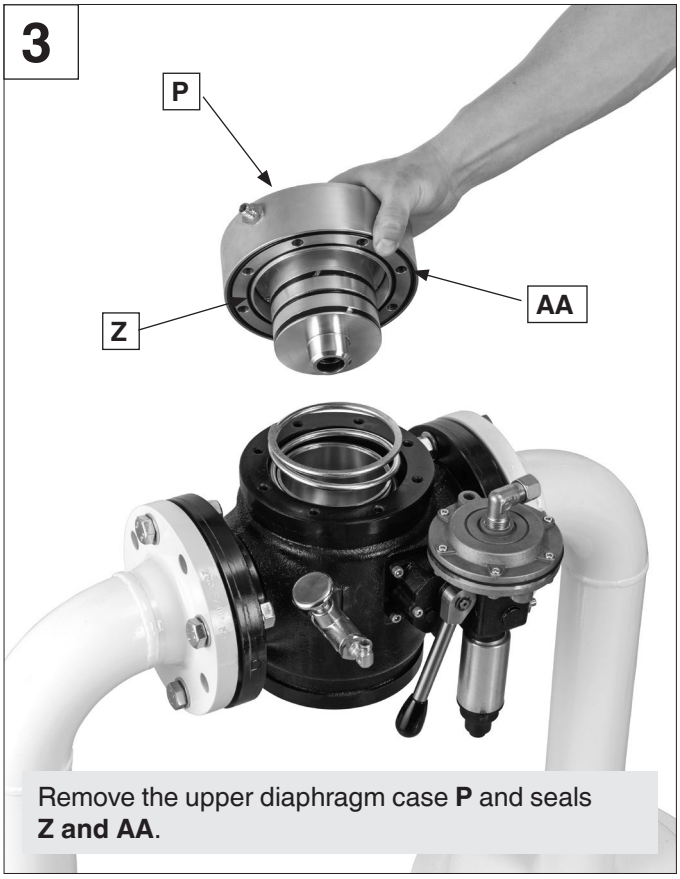

Remove the upper diaphragm case **P** and seals **Z and AA**.

4



Remove the SAV closing spring.

5

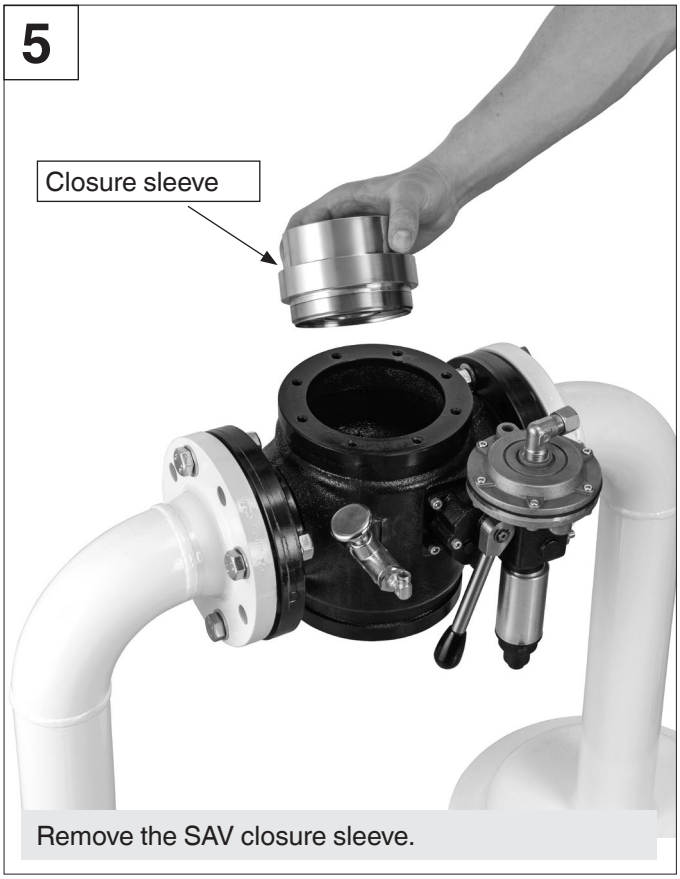

Remove the SAV closure sleeve.

13.2.3 Removing the ASE from the housing

1

Remove the retaining ring.

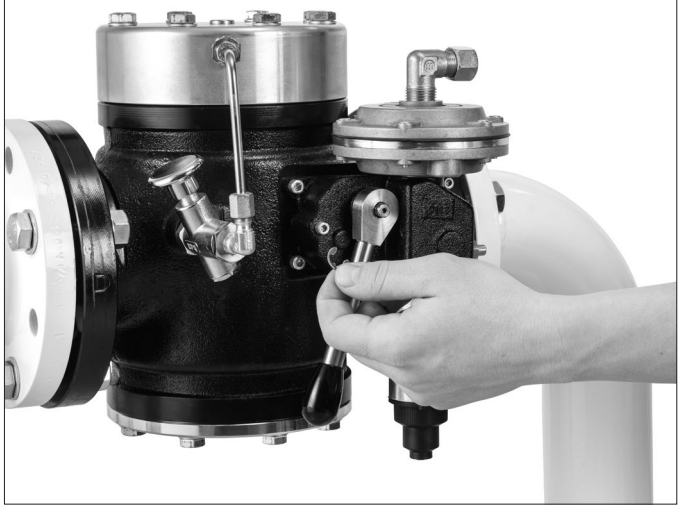

2

Remove the reset lever.

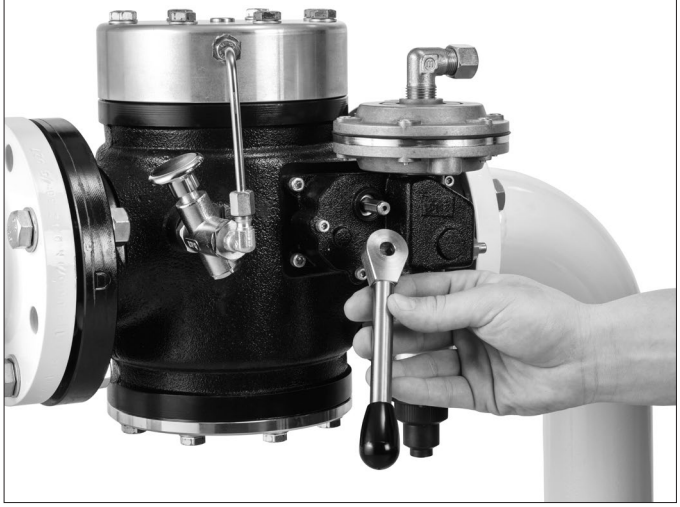

3

Unscrew both screws with the Allen wrench **SW 5 mm**.

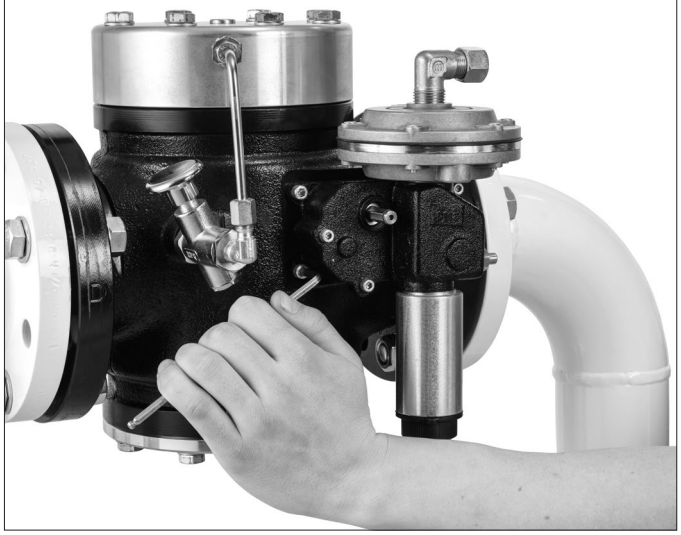

4

Remove the ASE.



13.2.4 Installing the ASE on the housing

- The replacement ASE has to be installed on a reinforced section on the housing:

1	Place the ASE at an angle of about 25° to its normal position. 
2	Release the ASE with the push-button.
3	Place the ASE in its position and tighten both screws with an Allen wrench **SW 5 mm**.
4	Attach the reset lever and secure it with the retaining ring.
5	Install the OPSO and UPSO adjusting springs.

13.3 Tools required

A



B



C

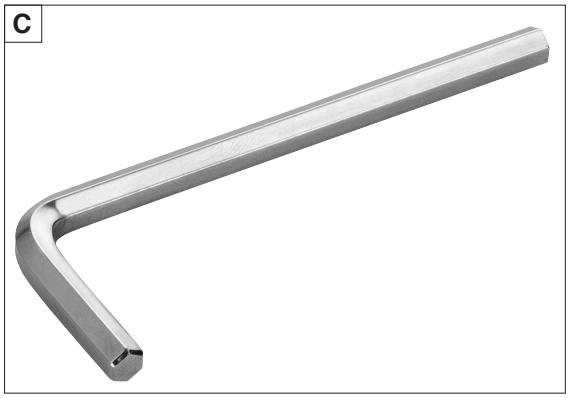

Work step		Tool designation	Pressure rating	Width across flats
1	Detaching the pulse line.	Spanner wrench (A)	MD / UHD	24
2	Releasing the adjusting springs.	Pipe socket spanner (B)	MD / UHD	17
		Pipe socket spanner (B)		22
3	Removing the ASE from the housing	Allen wrench (C)	MD / UHD	5

13.4 Leakage test

Check the device for internal and external leaks after maintenance and repair work.
Once completed… please follow the instructions according to section 11.2 (page 17) of this manual.

13.5 Recommended maintenance intervals

1. The maintenance intervals are subject to the system-specific operating and environmental conditions, gas quality, condition of the pipelines, etc.
2. The maintenance intervals have to be set by the system operator in line with the system requirements.
3. In order to guarantee system availability we recommend a **functional check once a month and maintenance once a year**.
4. The intervals for maintenance preset according to G 495 must be adhered to at the minimum.

Max. input pressure [bar]	Functional check	Maintenance
> 0.1 to 1	every 4 years	every 8 years
> 1 to 5	every 2 years	every 4 years
> 5	1x per year	every 2 years

14. Replacement parts

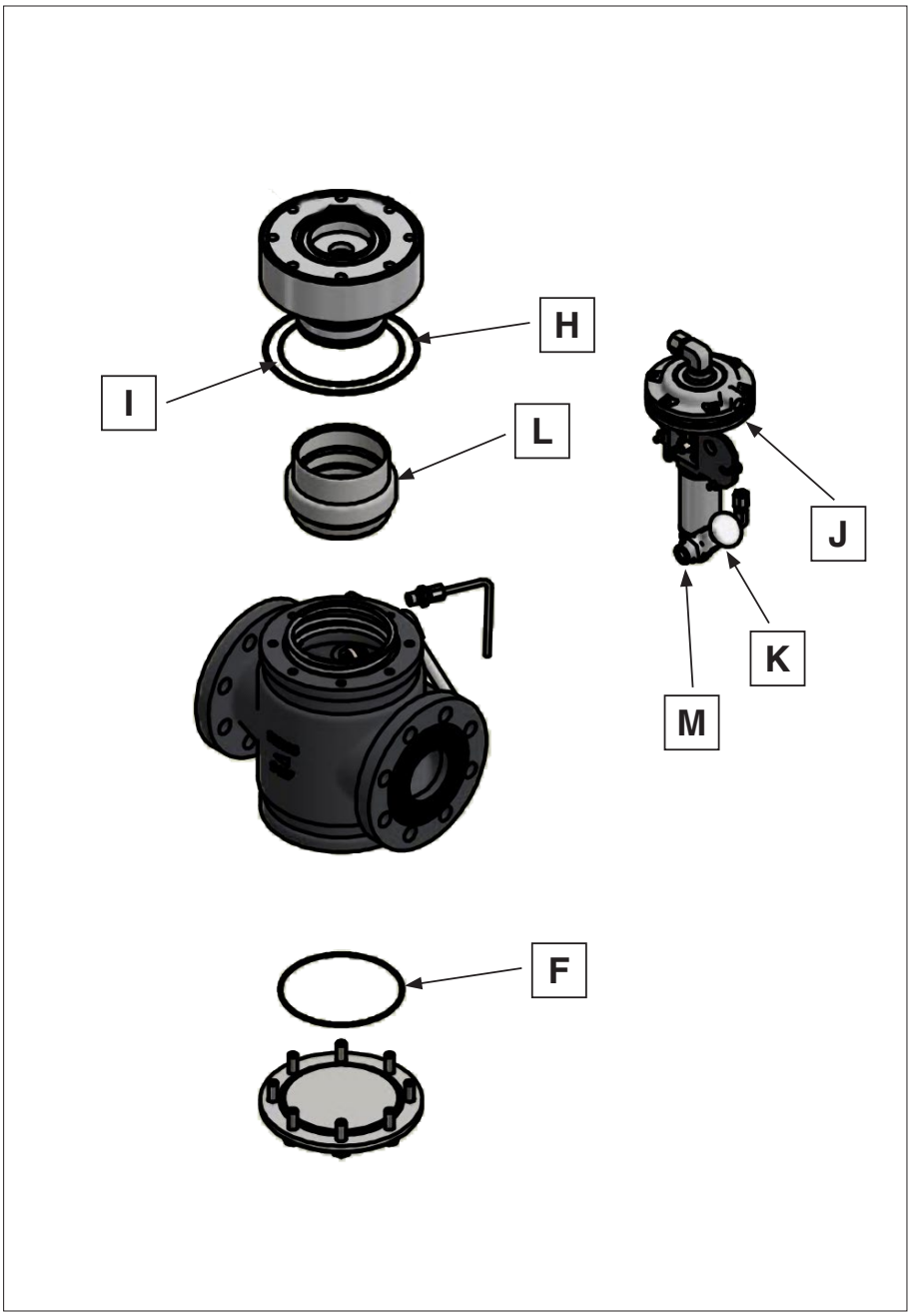

14.1 SAV replacement parts list

Set	Replacement part	Version	Order number	Replacement part / image
1	SAV closure sleeve	SAV 100065 - 100080 SAV 250065 - 250080	278003	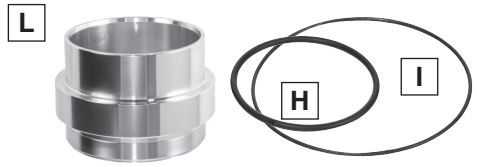
2	ASE with O-ring	SAV 100065 - 100080 MD	278006	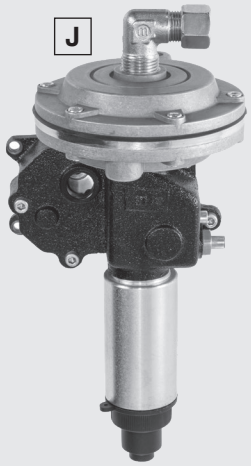
		SAV 100065 - 100080 SAV 250065 - 250080	278007	
3	Bypass push-button cock	SAV 100065 - 100080 HD SAV 250065 - 250080 UHD	278008	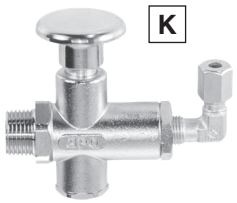

14.2 Storage conditions

As a general rule, DIN 7716 (standards for storage, maintenance and cleaning of rubber products) applies to the storage of diaphragms and O-rings.

The ageing process depends for the most part on the following factors:

- Temperature
- Thermal radiation
- Solar radiation
- Moisture
- Relative humidity
- Ozone
- Component stress condition

Proper storage

- Storage temperature between 5 °C and 20 °C
- No direct solar radiation
- No direct heat sources in the storage area
- No exposure to ozone
- Tension-free storage
- Storage in polyethylene bags
- Do not exceed the max. storage periods of 3 years.

15. Flow tables

Flow tables Δp SAV DN 65

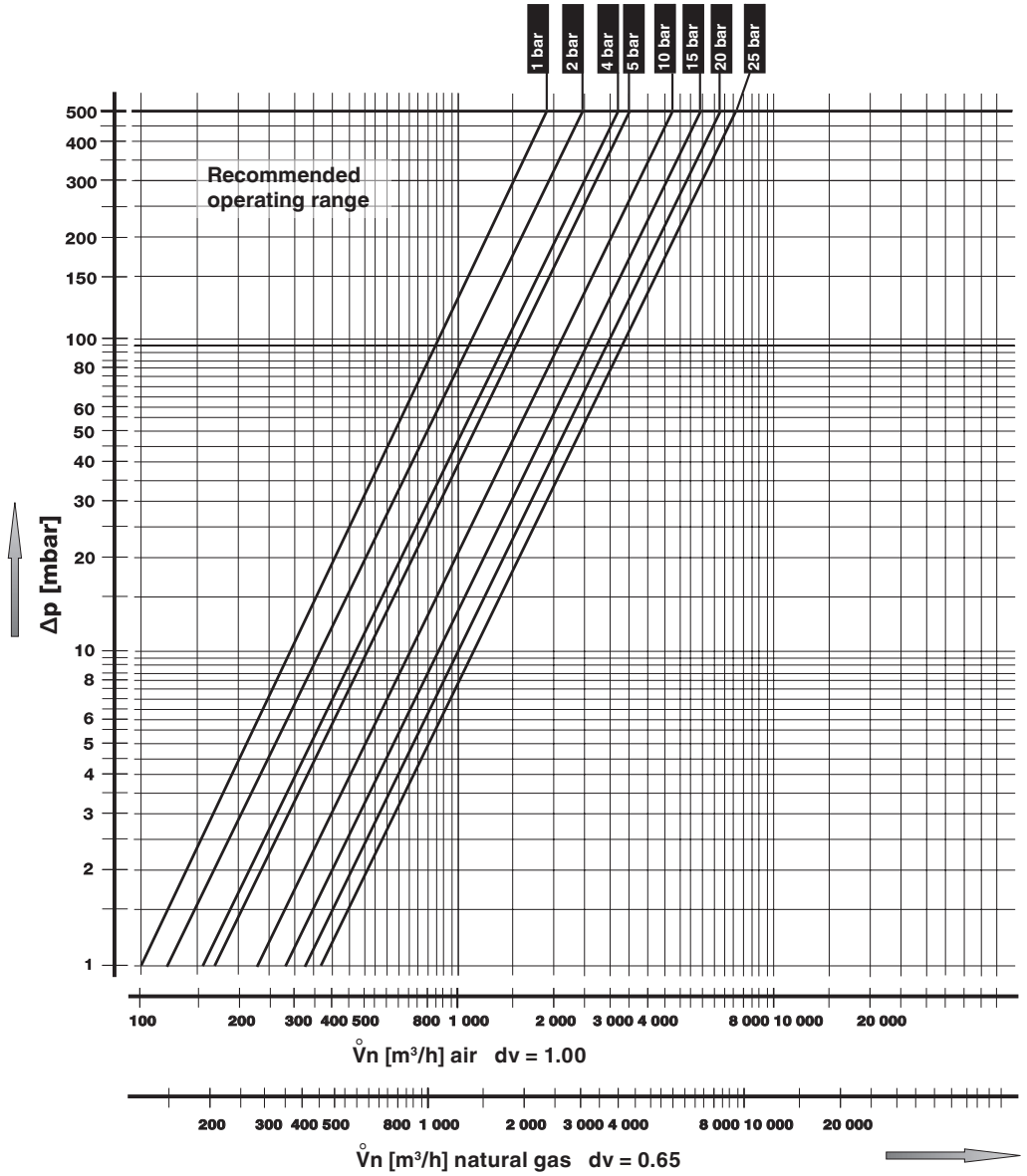

Based on +15 °C,
1 013 mbar, dry

Max. pressure difference
Δp = 500 mbar
Max. flow velocity
= 50 m/s

Flow tables Δp SAV DN 80

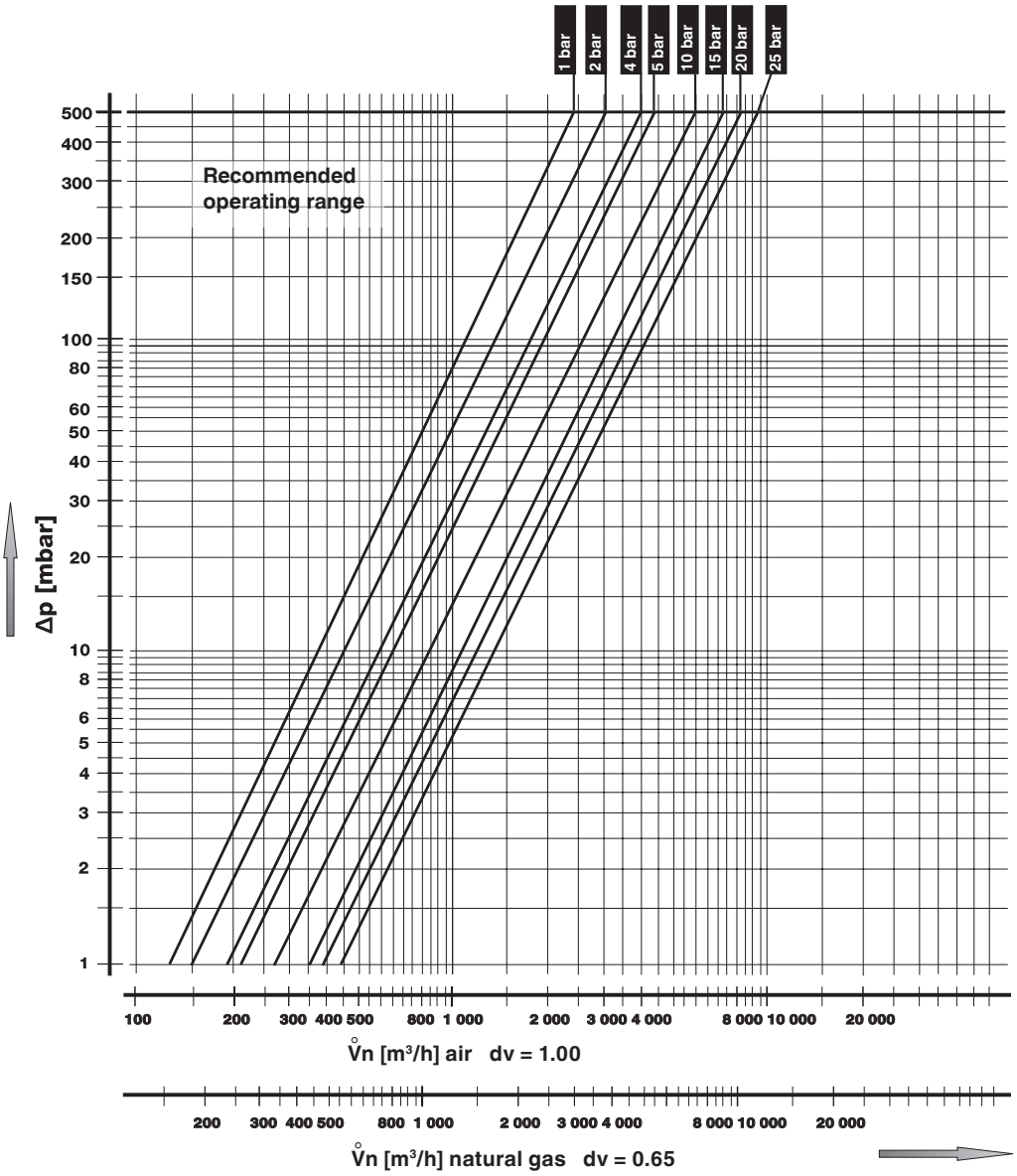

Based on +15 °C, 1 013 mbar, dry

Max. pressure difference Δp = 500 mbar
Max. flow velocity = 50 m/s

The maximum volume flow rate specified refers to natural gas with a density of 0.81 kg/m³ or to air with a density of 1.24 kg/m³ at 15 °C under normal conditions. In case of different types of gases, a conversion of the volume flow rate according to the following equation is carried out.

$$\dot{V}_{gas\ used} = \dot{V}_{air} \times f$$

$$f = \frac{\text{Density of the air}}{\text{Spec. weight of the gas used}}$$

Type of gas	Spec. weight [kg/m³]	dv	f
Natural gas	0.81	0.65	1.24
City gas	0.58	0.47	1.46
Liquid gas	2.08	1.67	0.77
Air	1.24	1.00	1.00



The Pressure Equipment Directive (PED) and the Energy Performance of Buildings Directive (EPBD) require a periodic inspection of heat generators in order to ensure a high degree of efficiency over a long term and, consequently, the least environmental pollution.

It is necessary to replace safety-relevant components after they have reached the end of their useful life:

Sicherheitsrelevante Komponente **Safety relevant component** **Composant relatif à la sécurité** **Componenti rilevanti dal punto di vista della sicurezza**	**Konstruktionsbedingte Lebensdauer** **Designed Lifetime** **Durée de vie prévue** **Durata di vita di progetto**		**Norm** **Standard** **Norme** **Norma**	**Dauerhafte Lagertemperatur** **Durable storage temperature** **Température de stockage permanente** **Temperatura di stoccaggio permanente**
	Zyklenzahl **Operating cycles** **Cycle d'opération** **Numero di cicli di funzionamento di progetto**	**Jahre** **Years** **Année** **Anni**		
Ventilprüfsysteme / Valve proving systems / Systèmes de contrôle de vannes / Sistemi di controllo valvole	250 000	10	EN 1643	0…45 °C 32…113 °F
Gas / Gas / Gaz / Gas Druckwächter / Pressure switch / Manostat / Pressostati	50 000	10	EN 1854	
Luft / Air / Air / Aria Druckwächter / Pressure switch / Manostat / Pressostati	250 000	10	EN 1854	
Gasmangelschalter / Low gas pressure switch / Pressostat gaz basse pression / Pressostati gas di minima pressione	N/A	10	EN 1854	
Feuerungsmanager / Automatic burner control / Dispositif de gestion de chauffage / Gestione bruciatore	250 000	10	EN 298 EN 230	
UV-Flammenfühler[1] Flame detector (UV probes)[1] Capteur de flammes UV[1] Sensore fiamma UV[1]	N/A	10 000 h[3]	---	
Gasdruckregelgeräte[1] Gas pressure regulators[1] Dispositifs de réglage de pression du gaz[1] Regolatori della pressione del gas[1]	N/A	15	EN 88-1 EN 88-2	
Gasventil mit Ventilprüfsystem[2] Gas valve with valve testing system[2] Vanne de gaz avec système de contrôle de vanne[2] Valvola del gas con sistema di controllo valvola[2]	nach erkanntem Fehler after error detection après détection d'erreur dopo segnalazione di errore		EN 1643	
Gasventil ohne Ventilprüfsystem[2] Gas valve without valve testing system[2] Vanne de gaz sans système de contrôle de vanne[2] Valvola del gas senza sistema di controllo valvola[2]	DN ≤ 25 200 000 25 < DN ≤ 80 100 000 80 < DN ≤ 150 50 000	10	EN 161	
Gas-Luft-Verbundsysteme / Gas-air ratio control system / Systèmes combinés gaz/air / Sistemi di miscelazione gas-aria	N/A	10	EN 88-1 EN 12067-2	

[1] Nachlassende Betriebseigenschaften wegen Alterung / Performance decrease due to ageing /
Réduction de performance due au viellissement / Riduzione delle prestazioni dovuta all'invecchiamento
[2] Gasfamilien II, III / Gas families II, III / Familles de gaz II, III / per i gas delle famiglie II, III
[3] Betriebsstunden / Operating hours / Heures de service / Ore di esercizio
N/A nicht anwendbar / not applicable / ne peut pas être utilisé / non può essere usato

Lagerzeiten / Storage times / Périodes de stockage / Tempi di stoccaggio

Lagerzeiten ≤ 1 Jahr verkürzen nicht die konstruktionsbedingte Lebensdauer.
Storage time ≤ 1 year does not reduce the designes lifetime.
Les périodes de stockage ≤ 1 an ne réduisent pas la durée de vie liée à la conception.
I tempi di stoccaggio ≤ 1 anno non riducono la durata di vita legata al design.

DUNGS empfiehlt eine **maximale Lagerzeit von 3 Jahren**.
DUNGS recommends a **maximum storage time of 3 years.**
DUNGS recommande une **durée de stockage maximale de 3 ans**.
DUNGS raccomanda un **tempo massimo di stoccaggio di 3 anni**.

We reserve the right to make modifications in the course of technical development.