GB

DUNGS®
Combustion Controls

User Manual

REED CONTACT – PROXIMITY SWTICH

1. Target group

The target group of this manual are specialised gas safety and control technology personnel. They can assess the work assigned to them and potential hazards on the basis of their technical training, knowledge and experiences. In accordance with the accepted rules of industrial safety only these persons are permitted to carry out the installation, start-up, adjustment and servicing of the equipment.



Place this user manual in an easily viewable location in the installation room! Perform work only after the safety instructions in this user manual have been read.

2. Warnings

2.1 General warnings



Follow the accepted rules of industrial safety and the accident prevention regulations, if necessary taking safety measures to ensure the protection of persons.

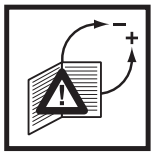

Execute all settings and setting values subject to compliance with the user manual for the machine connected.

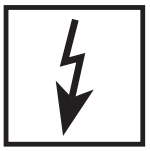

Never perform work when gas pressure or voltage is present. Avoid open fire. Comply with government regulations.



Check the device for transport damage prior to installation.



The device must not be exposed to an open flame. Protection against lightening must be provided.



Pipelines connected must be free of dirt and fouling.



Protection against environmental and climatic influences (corrosion, rain, snow, icing, moisture (e.g. due to condensation)), mould, UV radiation, harmful insects, and toxic, corrosive solutions / liquids (e.g. cutting / cooling fluids) must be ensured. Subject to the installation site, take safety measures when necessary.



The device may only be operated in accordance with the operating conditions specified on the rating plate.



Protect the device against vibrations and mechanical impacts.



The device must not be used in areas with heightened risk of earthquakes.

Explanation of the characters		
1, 2, 3,…	=	Take action consecutively
•	=	Instruction

2.2 Normal use

Normal use of the equipment is deemed to pertain provided the following instructions are followed:

- Use of the equipment in gas transport and gas distribution networks as well as in commercial and industrial systems.
- Use in pressure regulating systems according to EN 12186 and EN 12279.
- Use only with gases of the 1st and 2nd gas family according to EN 437.
- Use only with dry and clean gases, no aggressive media.
- Use only in accordance with the operating conditions specified on the rating plate.
- Use only in good order and condition.
- Malfunctions and faults must be corrected immediately.
- Use only when following the instructions in this user manual and the national regulations.

2.3 Risks in case of misuse

- The equipment is reliable in operation when used normally.
- Personal or consequential material damage, financial damage or environmental damage cannot be ruled out in the event of non-observance of the instructions.
- In the event of misuse or misapplication life and limb of the operator is threatened and serious damage to the device and other material assets is risked as well.

3. Scope of delivery

Please ensure that the delivery contents are complete.

A	1 x body M38 REED housing
B	1 x axle knob + contact adapter
C	1 x lever + half axle
D	1 x screw M4 x 15 mm
E	1 x cap Ø 38
F	1 x screw M3 x 8 mm
G	1 x inductive sensor M8 ATEX
H	2 x adjusting nuts M8

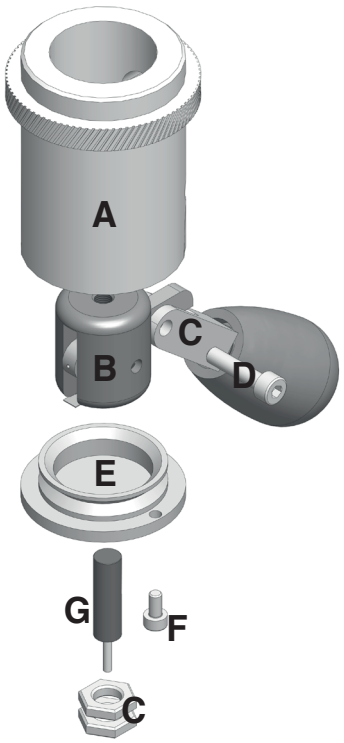

4. Installation

1

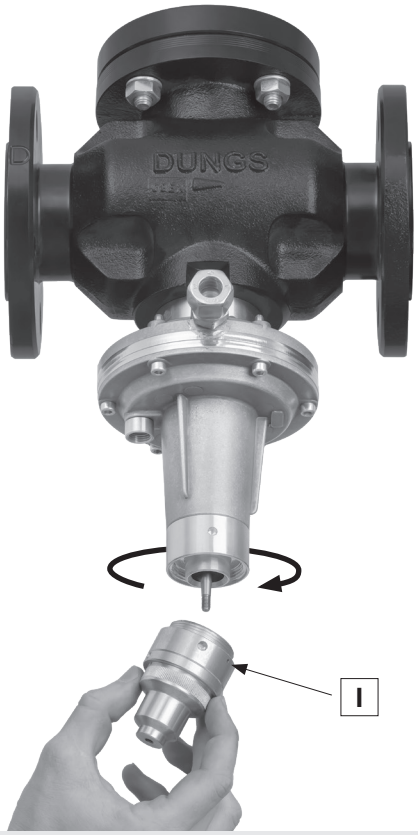

Remove the protective cap **I**.

2

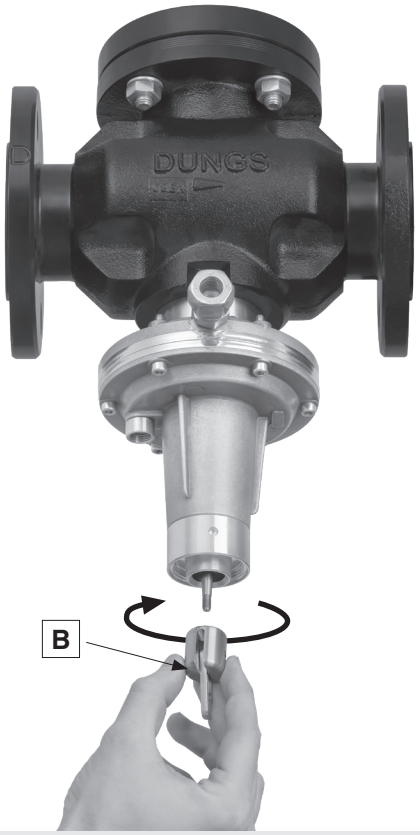

Screw axle knob + contact adapter **B** on.

3

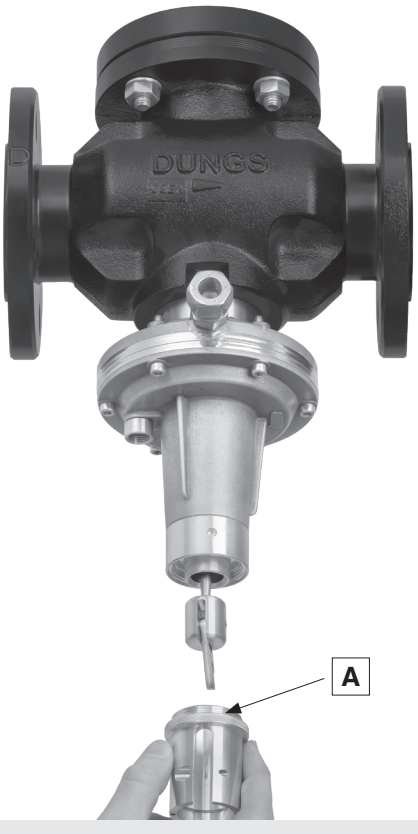

Screw new REED housing **A** on.

4

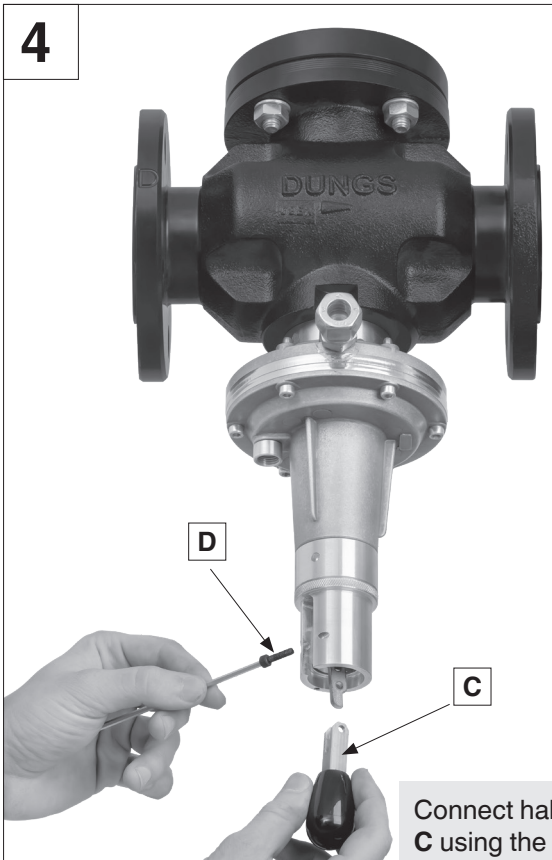

Connect half axle **C** using the contact adapter **B**.

5

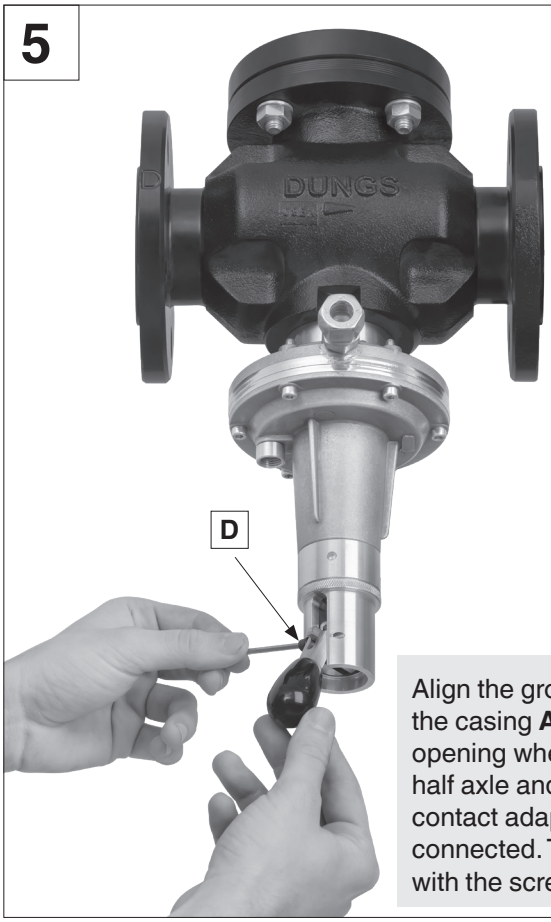

Align the groove of the casing **A** to the opening where the half axle and the contact adapter are connected. Tighten with the screw **D**.

6

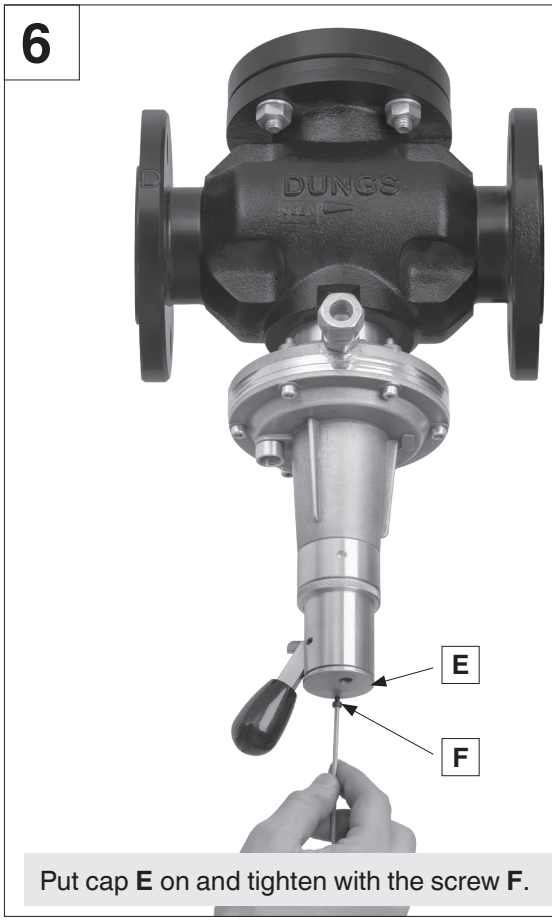

Put cap **E** on and tighten with the screw **F**.

7

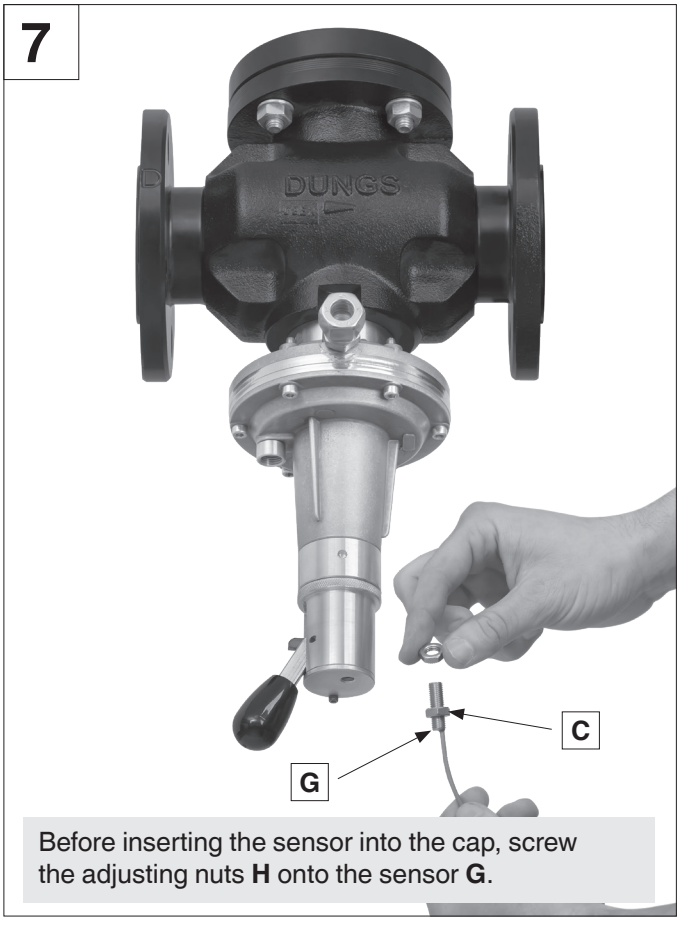

Before inserting the sensor into the cap, screw the adjusting nuts **H** onto the sensor **G**.

8

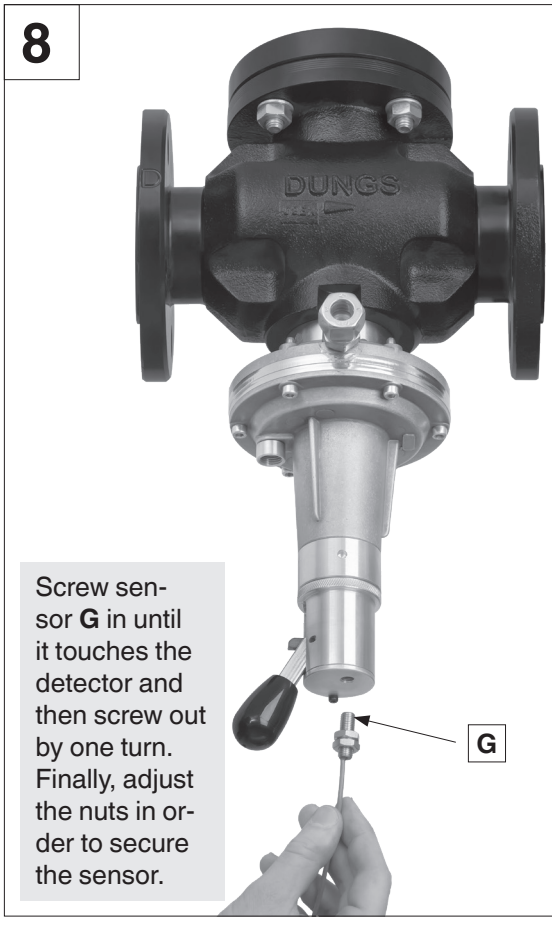

Screw sensor **G** in until it touches the detector and then screw out by one turn. Finally, adjust the nuts in order to secure the sensor.

DUNGS®
Combustion Controls

Headquarters and subsidiary

Karl Dungs GmbH & Co. KG
Karl-Dungs-Platz 1
D-73660 Urbach
Germany
Telephone +49 (0)7181-804-0
Telefax +49 (0)7181-804-166
E-mail: info@dungs.com
Internet: www.dungs.com

Subsidiary

Karl Dungs, S.L.U.
Av. Can Roqueta Nº 15
Pol. Ind. Can Roqueta
E-08202 Sabadell
Barcelona / Spain
Telephone +34 935 647-550
E-mail: info.e@dungs.com
Internet: www.dungs.com

MC • Edition 04.20 • No. 291 557