CPT-01

Quantometer
for secondary measurements



CPT-01 Quantometers have been designed in order to provide our customers with reliable and inexpensive measuring instruments for secondary flow measurements.
Our great experience in designing and manufacturing of turbine and rotary gas meters resulted in the development of industrial quantometers.
Taking into account our customers' demands we created the instrument with excellent metrological characteristics and operating performance close to performances of the turbine gas meters designed for custody transfer measurements. Other advantages of the CPT-01 Quantometers are as follows: high quality, easy maintenance, wide range of external devices that can co-operate with the quantometers, e.g. volume correctors, data loggers, data transmission systems. Due to that the CPT-01 Quantometers are well accepted by our domestic and foreign customers.

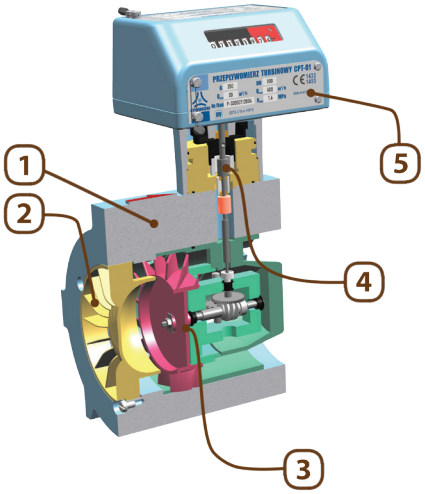

The basic components of the CPT-01 Quantometer are as follows:

- pressure resistant meter housing (1)
- inlet flow straightener (2)
- measuring cartridge with the turbine wheel (3)
- magnetic coupling as the transferring element between measuring cartridge and the index head (4)
- index head (5)

- ✓ maximum operating pressure: 20 bar
  suitable for PN16, PN20 ANSI 150 connection flanges
- ✓ nominal diameter:
  DN25 up to DN200
- ✓ meter housing:
  aluminium or steel (DN200)
- ✓ flow:
  2,5 to 2500 m^3/h
- ✓ rangeability:
  up to 1:30
  (depending on the meter)
- ✓ temperature range:
  gas temperature: -25°C to +70°C
  ambient temperature: -25°C to +70°C
- ✓ operating position:
  horizontal or vertical
- ✓ measurement accuracy:
  $Q_t \div Q_{max} < \pm 1{,}5\%$
  $Q_{min} \div Q_t < \pm 3{,}0\%$
- ✓ allowed medias: see Table 5

COMMON
ISO9001&14001 certified

Dimensions and weight

Overall dimensions and weights of the CPT-01 Quantometers

Sandwich version
DN50 - DN200

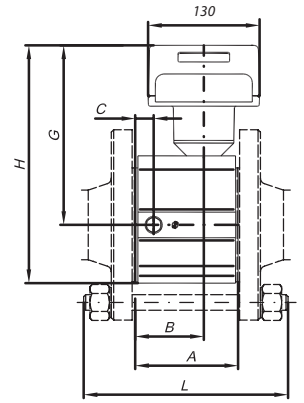

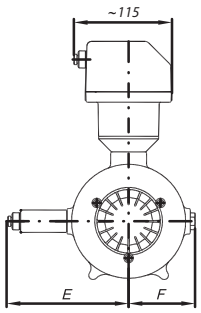

Dimensions E & F for all types

Table 1: Specification of the CPT-01 Quantometers.

DN	G	Maximum flow Q_{max}	Δp_{max} pressure loss at Q_{max} (1)	Minimum flow Q_{min}			LF pulse rate	HF1, HF2 pulse rate	HF pulse rate
				1:10	1:20	1:30			
[mm]	—	[m³/h]	[mbar]	[m³/h]			[pulse/m³]		
50	40	65	2,5	6,5	—	—	10	2610	94830
	65	100	5,0	10	—	—		2610	94830
65	65	100	1,6	10	8	—	10	1081	42560
	100	160	3,8	16	8	—	1	1081	42560
80	100	160	3,7	16	8	—	1	1081	42560
	160	250	5,4	25	13	8		844	30650
	250	400	11,4	40	20	13		470	17060
100	160	250	3,7	—	13	8	1	692	16780
	250	400	4,2	—	20	13		692	16780
	400	650	8,8	—	32	20		401	9720
150	400	650	2,4	—	32	20	1	227	6870
	650	1000	6,4	—	50	32		227	6870
	1000	1600	16,0	—	80	50	0,1	129	3910
200 (2)	650	1000	2,0	—	50	32	1	114	3110
	1000	1600	6,0	—	80	50	0,1	116	3170
	1600	2500	15,0	—	130	80		67	2025

(1) Pressure loss for air at atmospheric conditions
(2) DN200 casing is made of steel.

All quantometers' bodies are made of aluminium apart from DN200.
Contact your local representative or the manufacturer to get more information about the products.

Table 2: Dimensions and weights of the CPT-01 Quantometers.

DN	A	B	C	E	F	G	H	k*	L	Weight
[mm]									[mm]	[kg]
50	100	65	18	157	74	199	252	4xM16	200	3,6
65	120	80	21	170	86	211	278	4xM16	220	5,1
80	120	80	21	170	86	211	278	8xM16	220	5,3
100	150	100	29	183	100	225	305	8xM16	250	7,4
150	180	127	50	207	125	243	351	8xM20	300	11,6
200	200	146	56	223	140	272	407	12xM20	320	48

k* - amount of stud bolts necessary for mounting the wafer-type quantometers
Contact your local representative or the manufacturer to get more information about the products.

Overall dimensions and weights of the CPT-01S Screwed Quantometers

with external thread
DN25 & DN32
(1" or 1¼")

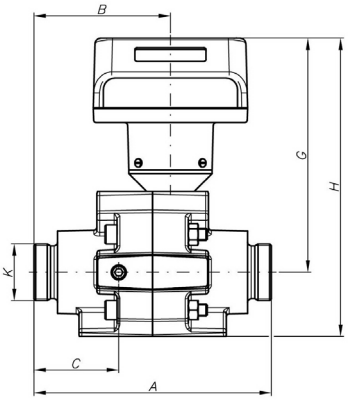

with internal thread
DN 40 & DN50
(1½" or 2")

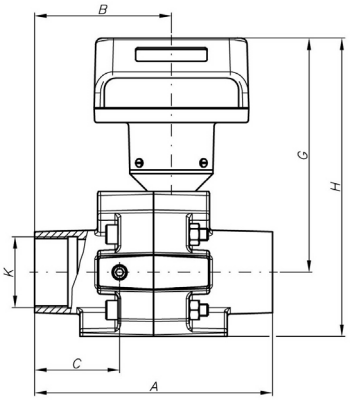

Table 3: Specification of the CPT-01 Screwed Quantometers.

DN	G	Thread	Maximum flow Q_{max}	Preassure loss (1) Q_{max}	Minimum flow Q_{min} 1:10	LF pulse rate	HF1, HF2 pulse rate	HF3 pulse rate
[mm]	—	[inch]	[m³/h]	[mbar]	[m³/h]	[pulse/m³]		
25	16	G 1½	25	4	2,5	10	9770	113585
	25	G 1½	40	4	4		8710	101275
32	25	G 2	40	3,2	4	10	8925	103755
40	40	G 1½	65	2,5	6,5	10	2610	94830
	65		100	5	10		2610	94830
50	40	G 2	65	2,5	6,5	10	2610	94830
	65		100	5	10		2610	94830

(1) Pressure loss for air at atmospheric conditions

All quantometers' bodies are made of aluminium.
Contact your local representative or the manufacturer to get more information about the products.

Table 4: Dimensions and weights of the CPT-01 Screwed Quantometers.

G	DN	A	B	C	K	G	H	Weight
—	[mm]				[inch]			[kg]
16	25	200	115	65	G 1 1/2	197	251	4,6
	32				G2			
25	25				G 1 1/2			4,6
	32				G2			
40/65	40				G 1½			4,4
	50				G 2			

G-threads as per DIN/ISO 228-1 standard and
the others as per ISO 7-1/EN 10226-1 standard.

COMMON
ISO9001&14001 certified

Pressure loss

Pressure drop during the gas flow through the quantometers is determined for air at atmospheric conditions. Maximum value of the Δp_{max} pressure drop for every CPT-01 Quantometer is given in table 1. This value was established during tests carried out at Q_{max} with air (ρ_0 = 1,2kg/m³ density). At real conditions Δp_{rz} pressure drop may be calculated with the following formula:

$$\Delta p_{rz} = \frac{\rho}{\rho_0} \times \frac{p_a + p}{p_a} \times \left(\frac{Q_{rz}}{Q_{max}}\right)^2 \times \Delta p_{max}\ [mbar]$$

Definitions:

- ρ — gas density according to table 5 [kg/m³]
- ρ_0 — air density, 1,2kg/m³
- p_a — atmospheric conditions
- p — overpressure of the gas measured before quantometer
- Δp_{max} — maximum pressure drop [mbar]
- Q_{max} — maximum flow of the quantometer (according to Table 1) [m³/h]
- Q_{rz} — flow at real conditions [m³/h]

Table 5: Physical properties of the most popular gases that may be measured by CPT-01 Quantometer. Density at 101,325kPa and 20°C.

Gas	Chemical symbol (formula)	Density ρ [kg/m³]	Density related to air	Execution
Argon	Ar	1,66	1,38	Standard IIB
Butane	C_4H_{10}	2,53	2,10	Standard IIB
Carbon dioxide	CO_2	1,84	1,16	Standard IIB
Carbon monoxide	CO	1,16	0,97	Standard IIB
Ethane	C_2H_6	1,27	1,06	Standard IIB
Ethylene	C_2H_4	1,17	0,98	Standard IIB
Helium	He	0,17	0,14	Standard IIB
Methane	CH_4	0,67	0,55	Standard IIB
Natural gas	-	~0,75	~0,63	Standard IIB
Nitrogen	N_2	1,16	0,97	Standard IIB
Propane	C_3H_8	1,87	1,56	Standard IIB
Acetylene	C_2H_2	1,09	0,91	Special IIC
Hydrogen	H_2	0,08	0,07	Special IIC
Air	-	1,2	1,00	Standard IIB

Description of pulse sensor connections

Pulse sensor pin numbering in sockets 1 and 2 installed in the index head. The sockets match the TUCHEL plug No C091 31H006 100 2

Connection lead no	Socket 1 pulse sensor	Socket 2 pulse sensor
1 - 4	LFK 1 (standard)	LFK 2
2 - 5	LFI 1	LFI 2
3 - 6	HF1 or AFK	HF2

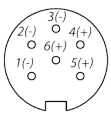

Pulse sensor pin numbering of the HF3 pulse transmitter's socket installed in the body. The sockets match the TUCHEL plug No C091 31D004 100 2

Connection lead no	HF over turbine wheel
1 - 2	Not used
3 - 4	HF3

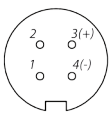

Outputs

- ✓ As an option the meters can be provided with maximum 8 pulse transmitters
- ✓ 2 off LFK – low frequency reed contact pulse sensor
- ✓ 2 off LFI – low frequency inductive pulse sensor (NAMUR)
- ✓ 2 off HF – inductive pulse sensors in the index head (NAMUR) - HF1, HF2
- ✓ 1 off HF – inductive pulse sensors in the meter body (NAMUR) - HF3
- ✓ AFK – anti-fraud reed contact (available as an option)
- ✓ Electrical outputs – Amphenol TUCHEL
- ✓ Index housing made of aluminium what perfectly protects index head against accidental damages
- ✓ Index housing may be provided with two separate sockets
- ✓ 1 pressure measurement tap
- ✓ 3-way valve - recommended for making connecions with pressure sensor of EVC

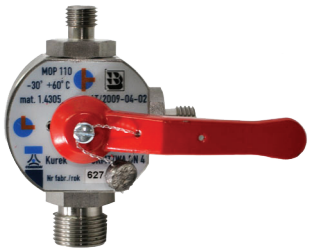

- ✓ Optional index heads

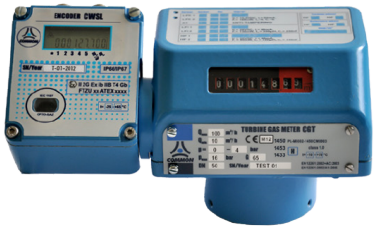

Index head with encoder (option)



Index head with mechanical output (option)

Installation and operation recomendations

- Meters should be shipped in their original package to the place of installation.
- Meters have to be handled with care and protected against falls, direct influence of rain, snow or high humidity.
- The measured gas should be clean, dry and free from solid impurities.
- It is recommended that the upstream pipe installation is to be equipped with a filter (10 micron).
- Prior to putting into operation in new installations, it is recommended to install a temporary top hat filter.
- Prior to installation the upstream and downstream pipe flanges should be aligned properly.
- Flange gaskets are to be installed so as not to disturb the gas flow.
- The gas flow should be in accordance with the arrow placed on the meter body.
- The piping should be executed so as to avoid unnecessary stresses acting on the meter.
- When used outdoors the meter should be protected against direct weather influence.
- When starting the gas flow through the installation, the valves should be opened slowly to ensure a gradual increase of pressure.
- It is required to install the quantometer after a 2D upstream pipe length and before 2D downstream pipe length.

ATTENTION! If valves are opened abruptly or pressure increase takes place in a short time it may happen that the measurement cartridge or the turbine wheel get damaged.

ALWAYS REMEMBER TO START UP THE METERS IN A PROPER WAY!

For more information, contact your local sales representative

COMMON S.A.
ul. Aleksandrowska 67/93
91-205 Łódź Polska
Tel. +48 42 253 66 00
Fax. +48 42 253 66 99
www.common.pl

COMMON
ISO9001&14001 certified