s.84 EN331

Female/Female
1/4" - 4"
EN 10226-1



HIGH TEMPERATURE RESISTANCE

Now approved for **HTB** use (Hochtemperaturbeständigkeit)

Class B 0,1 (0,1 bar @650°C for at least 30 minutes).

H2 READY: product approved in EU acc.to EN331 (sizes ¼" to 2") for the 1st, 2nd and 3rd gas families, therefore compatible with hydrogen use up to 50% in the gas mixture, as established in the 1st gas family of the EN437 (ref. G110)

QUALITY

- 24h 100% seal test guaranteed
- Dual sealing system allows valve to be operated in either direction making installation easier
- No metal-to-metal moving parts
- No maintenance ever required
- Handle clearly shows ball position
- Silicone-free lubricant on all seals
- Handle stops on body to avoid stresses at stem
- Chrome plated brass ball for longer life with rinse hole

BODY

- Hot forged sand blasted external nickel plated brass body and cap sealed with Loctite® or equivalent thread sealant
- Finest brass according to EN 12165 and EN 12164 specifications

STEM

- Blowout-proof nickel plated brass stem
- Maintenance-free, double FPM O-rings at the stem for maximum safety

SEALING

- Pure PTFE self-lubricating seats with flexible-lip design

THREADS

- EN 10226-1, ISO 228 parallel female by female threads

UPON REQUEST

- Stainless steel ball (1.4401 / AISI 316)
- Glass filled PTFE seals
- Custom design

FLOW

- Full port to DIN 3357 for maximum flow

PED DIRECTIVE

- Assessment according to Pressure Equipment Directive 2014/68/UE module B+D by ICIM (0425)

HANDLE

- Geomet® carbon steel handle with thick PVC dip coating. Handle coating offers both thermal and electrical protection
- **WARNING:** do not exceed reasonable temperature and/or electrical load
- Handle removable with valve in service

WORKING PRESSURE & TEMPERATURE

- 40 bar (600 PSI) up to 2", 30 bar (450 PSI) over 2" non-shock cold working pressure
- -40°C to +170°C (-40°F to +350°F)
- For use with dangerous fluids temperature rating is -20°C +60°C and pressure rating is 5 bar / **HTB** Class B 0,1
- AS4617 Limitation for GAS: 2100 Kpa up to 2" and 1500 Kpa from 2 ½" to 4" rated working pressure and 0°C / +60°C temperature
- **WARNING:** freezing of the fluid in the installation may severely damage the valve

APPROVED BY OR IN COMPLIANCE WITH

- The Australian Gas Association (Australia)
- SVGW (Switzerland)
- Factory Mutual (United States)
- BSI Group (United Kingdom)
- RoHS Compliant (EU)
- DIN-DVGW (Germany) – MOP 5 B 0,1
- EAC – Declaration of conformity (Russia, Kazakhstan, Belarus)
- ARGB-KVBG (Belgium) – MOP 5 bar for outside building gas installation, MOP 100 mbar for inside the buildings

NOTE: approvals apply to specific configurations/sizes only.

OPTIONS UP TO 2" SIZE

- Oval lockable handle up to 2", round over 2" 1
- Patented locking device for valves up to 4" 2
- Stainless steel handle (1.4016 / AISI 430) 3
- Stubby handle 4
- T-handle 5
- Stem extension
- ***RuB*** memory stop designed to be installed with our stubby handle



s.84EN331 XCES84E - 5813

Each user should perform his own tests to find out the suitability for his particular application. BONOMI INDUSTRIES makes no warranty, express or implied, as to the shape, fit or function of a product for any application. Contact us or consult with your supplier for additional information on the suitability of the BONOMI INDUSTRIES products with your specific field of use.

GAS

	Part description	Q.ty	Material
1	Nickel plated body (external nickel plated, unplated inside up to 2")	1	CW617N
2	Seat	2	PTFE
3	Chrome plated ball with rinse hole (read rinse hole on sizes from 3/4" up to 2")	1	CW617N
4	Nickel plated end-cap (external nickel plated, unplated inside up to 2")	1	CW617N
5	Nickel plated stem O-ring design	1	CW617N
6	Geomet® nut	1	C4C (EN10263-2)
7	O-Ring	2	FPM
8	Yellow PVC coated Geomet® steel handle	1	DD11 (EN10111)

1 ¼" - 2" hollow ball

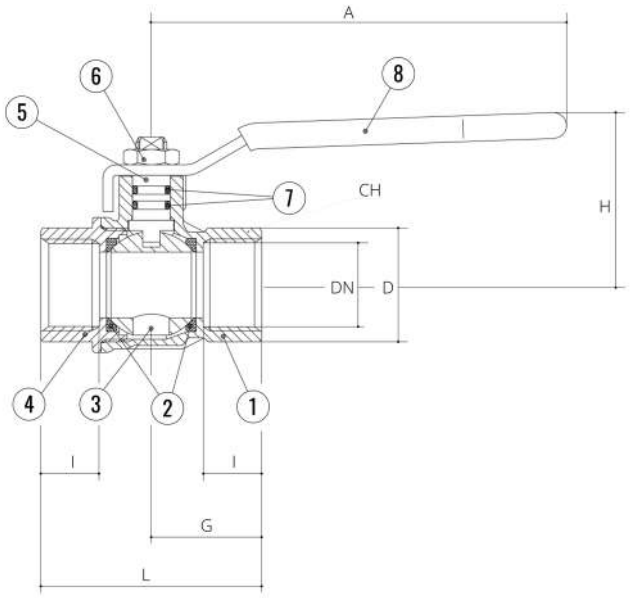

Compliant to CE 2014/68/UE product Equipment category III Module B+D

Code	S84B00	S84C00	S84D00	S84E00	S84F00	S84G00	S84H00	S84I00	S84L00	S84M00	S84N00
D (inch)	1/4"	3/8"	1/2"	3/4"	1"	1 ¼"	1 ½	2"	2 ½"	3"	4"
DN (mm)	8	10	15	20	25	32	40	50	65	80	100
I (mm)	12	12	15.5	17	21	23	23	26.5	32	35	41.5
L (mm)	45	45	59	64	81	93	102	121	156	177	216
G (mm)	22.5	22.5	29.5	32	40.5	46.5	51	60.5	78	88.5	108
A (mm)	82	82	100	120	120	158	158	158	255	255	255
H (mm)	38	38	43	50	54	73	79	86	132	140	154
CH (mm)	17	20	25	31	40	49	54	68.5	85	99	125
Kv (m3/h)	3.9	8.2	28	36	62	79	124	178	516	776	1130

DN shows the nominal flow diameter. Actual flow diameter complies with full port DIN 3357 part 4. Stem configuration of valves over 2" is slightly different. Ball valves are marked CE on handle from 1 ¼" to 2", on body over 2" as follow:
CE 0425 cat IIIB+D PS: 5 GAS TS1: -20°C TS2: +60°C

PRESSURE-TEMPERATURE CHART

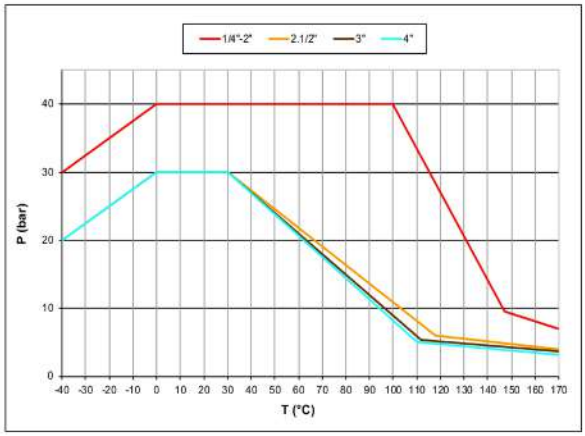

PRESSURE DROP CHART

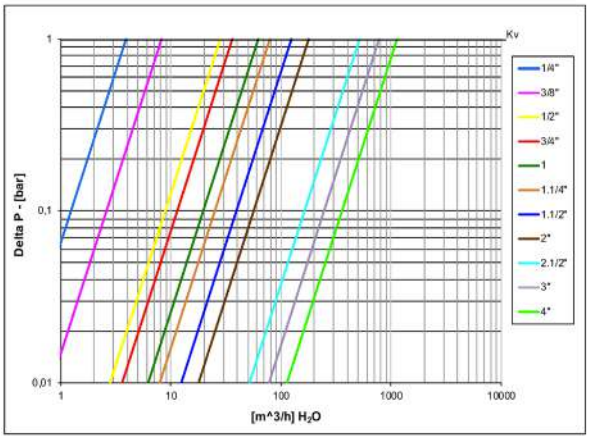

AS4617 limitations for GAS: 2100 Kpa up to 2" and 1500 Kpa from 2 ½" to 4" rated working pressure and 0°C +60°C temperature

s.84 EN331 M/F

Male/Female
1/4" - 4"
EN 10226-1



HIGH TEMPERATURE RESISTANCE

Now approved for **HTB** use (Hochtemperaturbeständigkeit)

Class B 0,1 (0,1 bar @650°C for at least 30 minutes).

H2 READY: product approved in EU acc.to EN331 (sizes ¼" to 2") for the 1st, 2nd and 3rd gas families, therefore compatible with hydrogen use up to 50% in the gas mixture, as established in the 1st gas family of the EN437 (ref. G110)

QUALITY

- 24h 100% seal test guaranteed
- Dual sealing system allows valve to be operated in either direction making installation easier
- No metal-to-metal moving parts
- No maintenance ever required
- Handle clearly shows ball position
- Silicone-free lubricant on all seals
- Handle stops on body to avoid stresses at stem
- Chrome plated brass ball for longer life with rinse hole

BODY

- Hot forged sand blasted external nickel plated brass body and cap sealed with Loctite® or equivalent thread sealant
- Finest brass according to EN 12165 and EN 12164 specifications

STEM

- Blowout-proof nickel plated brass stem
- Maintenance-free, double FPM O-rings at the stem for maximum safety

SEALING

- Pure PTFE self-lubricating seats with flexible-lip design

THREADS

- EN 10226-1, ISO 228 parallel female thread by EN10226-1, ISO7/1 taper male thread

PED DIRECTIVE

- Assessment according to Pressure Equipment Directive 2014/68/UE module B+D by ICIM (0425)

FLOW

- Full port to DIN 3357 for maximum flow

HANDLE

- Geomet® carbon steel handle with thick PVC dip coating. Handle coating offers both thermal and electrical protection
- **WARNING:** do not exceed reasonable temperature and/or electrical load
- Handle removable with valve in service

WORKING PRESSURE & TEMPERATURE

- 40 bar (600 PSI) up to 2", 30 bar (450 PSI) over 2" non-shock cold working pressure
- -40°C to +170°C (-40°F to +350°F)
- For use with dangerous fluids temperature rating is -20°C +60°C and pressure rating is 5 bar / **HTB** Class B 0,1
- AS4617 Limitation for GAS: 2100 Kpa up to 2" and 1500 Kpa from 2 ½" to 4" rated working pressure and 0°C / +60°C temperature
- **WARNING:** freezing of the fluid in the installation may severely damage the valve

UPON REQUEST

- Stainless steel ball (1.4401 / AISI 316)
- Glass filled PTFE seals
- Custom design

APPROVED BY OR IN COMPLIANCE WITH

- The Australian Gas Association (Australia)
- SVGW (Switzerland)
- Factory Mutual (United States)
- BSI Group (United Kingdom)
- RoHS Compliant (EU)
- DIN-DVGW (Germany) – MOP 5 B 0,1
- EAC – Declaration of conformity (Russia, Kazakhstan, Belarus)
- ARGB-KVBG (Belgium) – MOP 5 bar for outside building gas installation

NOTE: approvals apply to specific configurations/sizes only.

OPTIONS UP TO 2" SIZE

- Oval lockable handle up to 2", round over 2" 1
- Patented locking device for valves up to 4" 2
- Stainless steel handle (1.4016 / AISI 430) 3
- Stubby handle 4
- T-handle 5
- Stem extension
- ***RuB*** memory stop designed to be installed with our stubby handle



s.84 EN331 MF XCES84EM - 5813

Each user should perform his own tests to find out the suitability for his particular application. BONOMI INDUSTRIES makes no warranty, express or implied, as to the shape, fit or function of a product for any application. Contact us or consult with your supplier for additional information on the suitability of the BONOMI INDUSTRIES products with your specific field of use.

GAS

	Part description	Q.ty	Material
1	Nickel plated body (external nickel plated, unplated inside up to 2")	1	CW617N
2	Seat	2	PTFE
3	Chrome plated ball with rinse hole (read rinse hole on sizes from 3/4" up to 2")	1	CW617N
4	Nickel plated end-cap (external nickel plated, unplated inside up to 2")	1	CW617N
5	Nickel plated stem O-ring design	1	CW617N
6	Geomet® nut	1	C4C (EN10263-2)
7	O-Ring	2	FPM
8	Yellow PVC coated Geomet® steel handle	1	DD11 (EN10111)

1 ¼" - 2" hollow ball

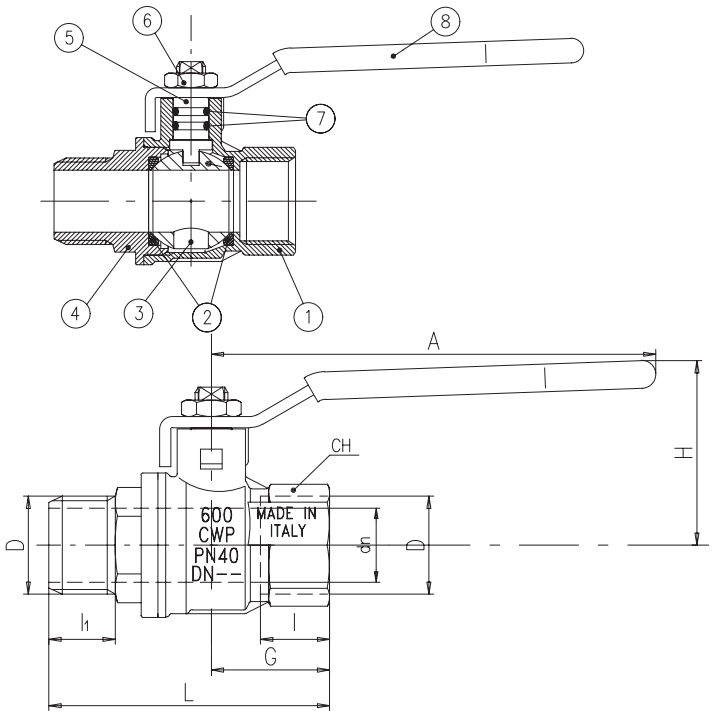

Compliant to CE 2014/68/UE product Equipment category III Module B+D

Code	S84B20	S84C20	S84D20	S84E20	S84F20	S84G20	S84H20	S84I20	S84L20	S84M20	S84N20
D (inch)	1/4"	3/8"	1/2"	3/4"	1"	1 ¼"	1 ½"	2"	2 ½"	3"	4"
DN (mm)	8	10	15	20	25	32	40	50	65	80	100
I (mm)	12	12	15.5	17	21	23	23	26.5	32	35	41.5
I1 (mm)	13.5	13.5	16.5	18	22	24	24	27.5	37	39.5	44
L (mm)	56.5	56.5	70	76.5	92.5	106	113	133	180.5	204.5	238
G (mm)	22.5	22.5	29.5	32	40.5	46.5	51	60.5	78	88.5	108
A (mm)	82	82	100	120	120	158	158	158	255	255	255
H (mm)	38	38	43	50	54	73	79	86	132	140	154
CH (mm)	17	20	25	31	40	49	54	68.5	85	99	125
Kv (m3/h)	3.9	8.2	28	36	62	79	124	178	516	776	1130

DN shows the nominal flow diameter. Actual flow diameter complies with full port DIN 3357 part 4. Stem configuration of valves over 2" is slightly different. Ball valves are marked CE on handle from 1 ¼" to 2", on body over 2" as follow:
CE 0425 cat IIIB+D PS: 5 GAS TS1: -20°C TS2: +60°C

PRESSURE-TEMPERATURE CHART

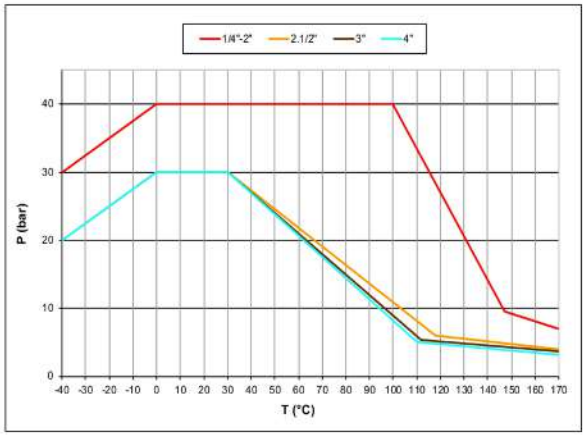

PRESSURE DROP CHART

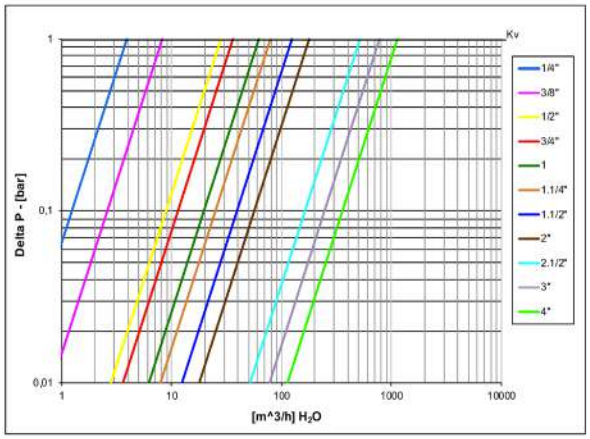

AS4617 limitations for GAS: 2100 Kpa up to 2" and 1500 Kpa from 2 ½" to 4"
rated working pressure and 0°C +60°C temperature