DUNGS®
Combustion Controls

Manual
MPA 41xx V2.0

Edition: 2025.03

GB







No. 300 967 - GB

Table of Contents

Target group / Warnings 3
Normal use / Risks in case of misuse 4
Approval overview 5
System description / Variants / Accessories 6
Technical data 7
Connection diagram 8-9
Technical data Outputs / Inputs / General 10-11
Flame monitoring / Connection of flame detector device 12-13
Installation MPA 411x 14
Dimensions MPA 411x 15
Installation MPA 412x 16
Dimensions MPA 412x 16
Display AM41 17
Description of functions 18-19
- Unlock function
- Enhanced unlock
- Access level
- Gas valves
- Multifunction display
- Parameter mode
- Function switch Automatic / Parameter mode

Flow diagram 20-22
Configuration of multifunction inputs / Function of outputs 23-25
State description 26-30
Parameters / Parameter change 31
Parameters / Parameter description 32-43
Parameters / Factory settings 44-46
Status information 47-48
MPA 4114 / Version without display 49-50
MPA 41x2 / Version with display function 51
MPA 41x2 / Overview of the display modes 52
MPA 41x2 / Display 53
MPA 41x2 / Operating mode display 54
MPA 41x2 / Operating display – additional information / Setting of the bus address 55
MPA 41x2 / Information display 56-57
MPA 41x2 / Error display 58
MPA 41x2 / Error memory display 59
MPA 41x2 / Parameter display 60-67
MPA 41x2 / Reset display 68-69
MPA 41x2 / Shutdown function 70
MPA 41xx / Error overview for minimum display 71
MPA 41xx / Error without error ID 72
MPA 41xx / Error from the basic system 73-74
MPA 41xx / Error from the extension functions 75-77
EMC-compliant installation 78
Setting the fieldbus address / Bus termination 79
MPA 41xx-EM 2/4 Profibus, Modbus, shutter activation 80-96
MPA 41xx-EM 2/4 Extension module 97-123
Flame detector device 124-125
UV 41(HE) 126-127
UV 42 128-129
UV 4x EM 1/1 Shutter module 130-131
FLW 20xx UV 132-134
FLW 10xx IR 135-137
FLW 41I 138-139
Ignition transformers 140-142
VisionBox 143

GB

Product manual

MPA 41xx

1. Target group

The target group of this manual is specialised **gas safety and control technology personnel, qualified persons or the persons instructed by them**.
They can assess the work assigned to them as well as potential hazards on the basis of their technical training, knowledge and experience, as well as knowledge of the relevant regulations. Only they are permitted to install, start up, adjust and service the equipment under compliance with the accepted rules of industrial safety.



Place this user manual in an easily viewable location in the installation room! Perform work only after reading the safety instructions in this user manual.

2. Warnings

2.1 General warnings



The accepted rules of industrial safety and the accident prevention regulations must be followed, if necessary taking safety measures to ensure the protection of persons.



Carry out all settings and setting values only in accordance with the user manual of the connected machine.

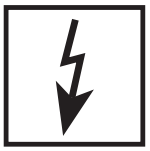

Never perform work when gas pressure or voltage is present. Avoid open fire. Comply with government regulations.



The device must be examined for transport damage prior to installation.



The device must not be exposed to an open flame. Protection against lightning must be provided.



Pipelines connected must be free of dirt and fouling.



Protection must be ensured against environmental and climatic influences (corrosion, snow, icing, moisture (e.g. due to condensation), mold, UV radiation, harmful insects and toxic, corrosive solutions / liquids (e.g. cutting / cooling fluids)). Appropriate safety measures must be taken depending on the installation location.



The device may only be operated in accordance with the operating conditions specified on the rating plate.



The device must be protected against vibrations and mechanical shocks.



The device must not be used in areas with heightened risk of earthquakes.

Explanation of the characters		
1, 2, 3, …	=	Perform actions in sequence
•	=	Instruction

2.2 Normal use

The device is considered to be used as intended if the following instructions are followed:

- Use only in accordance with the operating conditions specified on the rating plate.
- Use only in good order and condition.
- Malfunctions and faults must be corrected immediately.
- Use only when following the instructions in this user manual and the national regulations.

2.3 Risks in case of misuse

- The equipment is reliable in operation when used normally.
- Personal or consequential material damage, financial damage or environmental damage is possible in the event of non-observance of the instructions.
- Misuse or misapplication pose a risk to the life and limb of the operator, the device and other material assets.
- The mains switch of the MPA 4122 is not defined as a disconnector within the context of DIN EN 60730. Even in the OFF switch position, mains voltage is still present within the housing.
  Risk of fatal electric shocks!
  As a result, the power supply must be interrupted before opening the housing.

Approval overview

Approval overview	CE	SIL	GAR	PED	UKCA	EAC	EURO-TYSK Ukrai-na	UL listed US+CA	FM	AGA
MPA 4112 230VAC...	x	x	x	x	x	x	x			x
MPA 4112 115VAC...	x	x	x	x	x	x	x	x[2)]	x	x
MPA 4114 230VAC...	x	x	x	x	x	x	x			x
MPA 4114 115VAC...	x	x	x	x	x	x	x	x[2)]	x	x
MPA 4122 230VAC...	x	x	x	x	x	x	x			x
MPA 4122 115VAC...	x	x	x	x	x	x	x	x	x	x
AM41	x		x	x	x	x	x	x[1)]	x	x
EM x/y	x	x	x	x	x	x	x	x	x	x
Flame detector device										
FLW 10 IR	x		x		x	x	x			
FLW 20 UV	x		x		x	x	x			x
FLW 41	x		x		x	x	x			x
UV41	x		x	x	x	x	x	x	x	x
UV41 HE	x		x		x	x	x	x	x	x
UV42	x		x		x	x	x	x	x	x
UV 4x-EM1/1 (Shutter)	x		x		x	x	x	x	x	x

[1)] Open Type Listing in conjunction with UL approval. The enclosures are not NEMA rated. Therefore, these devices must be installed in an enclosure that is at least NEMA 1.
[2)] The device bases are only intended for flexible conduit connections.

Safety integrity level (SIL)

MPA 41xx from V2.0	UV4x	UV4x-EM 1/1 (shutter)	Components	SIL	SFF	PFH
X			Ionisation input	3	99.46 %	1.84E-09
X			Input FLW 2 NO, FLW 2 NC, LDW and remote unlocking	3	99.37 %	1.80E-09
X	**X**		UV41 + ionisation input	2	96.90 %	1.50E-07
X	**X**		UV42 + input FLW 2 NO	2	96.87 %	1.51E-07
X	**X**	**X**	UV4x-EM 1/1 (shutter) + UV41 + ionisation input	3	99.34 %	3.15E-08
X	**X**	**X**	UV4x-EM 1/1 (shutter) + UV42 + input FLW 2 NO	3	99.34 %	3.15E-08

MPA 41xx system description

The MPA 41xx automatic gas burner control systems are suitable for intermittent or continuous operation of gas burners with or without fan. The system parameters may be set on the integrated display and/or using the DUNGS VisionBox.
The flame is monitored either using:
- Ionisation
- Flame detector device FLW xx
- Flame detector device UV 41

connected to the ionisation electrode input or over a second flame detector input for a flame detector device with potential-free two-way contact or by means of the DUNGS UV 42 flame detector device. The two flame detector device inputs may be used individually or in combination.

The MPA 41xx V2.0 with integrated extension modules is intended for use in networked burner systems.

System variants

Designation	Article no.	Voltage	Display
MPA 4112	294812	230 VAC	3-digit 7-segment internal display
MPA 4112	294815	115 VAC	3-digit 7-segment internal display
MPA 4114	294819	230 VAC	Minimal display / 3-digit 7-segment internal display
MPA 4114	294822	115 VAC	Minimal display / 3-digit 7-segment internal display
MPA 4122	297000	230 VAC	3-digit 7-segment internal display
MPA 4122	297009	115 VAC	3-digit 7-segment internal display

Accessories

Ignition transformers:
- DEZ xxx, DIZ xxx
- Mains connection line
- Ignition line

Flame detector devices:
- IR: FLW 10IR, FLW 10IR V2.1, KLC20 / 230 VAC
- UV: FLW 20, FLW 20 UV/F/(HE), UV 41, UV 41 HE, UV 42
- Ionisation: FLW 41I

Extension module EM
- EM 2/4: Shutter, Profibus DP, Modbus
- EM 2/6: Shutter, Profibus DP, Modbus, PWM, analogue in / out
- EM 2/8: Shutter, Profinet, PWM, analogue in / out
- EM 2/9: Shutter, Profinet

Technical data

General information about the MPA 41xx	
Protection type MPA 4112 MPA 4114 Anzeige AM 41 MPA 4122	 IP 54, IP40 if EM 2/8 or EM 2/9 is installed IP 54, IP40 if EM 2/8 or EM 2/9 is installed IP 20, after installation: front side IP 54, rear side IP 20 IP 65 (attention: use suitable cable screw connections only)
Ambient temperature MPA 41xx	-20 °C to +60 °C for UL approval -40 °C to +70 °C
Storage and transport	-40 °C to +80 °C
Humidity	DIN 60730-1, no dewing admissible
Operating altitude	Suitable for use up to 2 000 metres above mean sea level
Service life Switching outputs	At least 250 000 switching operations
Installation position	Any
Dimensions (L x H x D): MPA 411x in mm	MPA 4114 152.5 x 165 x 77 mm MPA 4112 approx. 152.5 x 151.5 x 77 mm
Weight MPA 411x	0.82 kg
Dimensions (L x H x D): MPA 412x in mm	MPA 4122 approx. 160 x 245 x 100 mm (excluding cable screw connections)
Weight MPA 412x	2.2 kg

Electrical data	
Rated voltage	230 VAC -15 % … +10 % or 115 VAC -15 % … +10 %, depending on the version
Frequency	50 Hz … 60 Hz
Fuse	6.3 A delayed or 10 A fast-acting, integrated, replaceable
Isolation	No galvanic isolation between grid and 24 VDC or 5 VDC
Electrical connection	**In-phase** (!) connection and protective earth connection according to connection diagram. The **touch protection** for the UV sensor must be ensured through installation in the operating equipment
Power consumption (own consumption)	Maximum 10 W Typical 115 V 230 V Standby 1.5 W … 1.8 W Operation 3.4 W … 4.8 W With extension module EM 2/4: Standby 3.3 W … 3.5 W Operation 5.4 W … 6.3 W With extension module EM 2/6: Standby 6.0 W … 6.3 W Operation 6.2 W … 9.0 W
Short-circuit current ION against N 115/230 VAC	280 µA

Connection diagram
MPA 411x

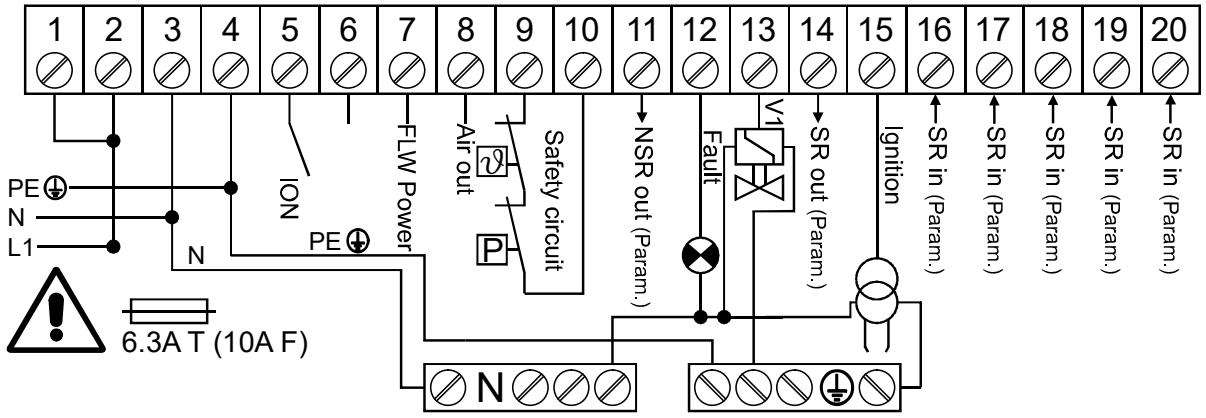

* The connection lines used must be suitable for an ambient temperature of at least 75 °C (167 °F).

** "Different functions can be configured for the inputs X16 to X20, see the chapter for the parameters P18, P26-P29. For the output X11, see chapter P19; for output X14, see chapter P38."

Attention:
After removing the hood, it is possible to touch electrical connections in the terminal socket. The power supply must therefore be interrupted before opening the hood.

Do not remove the jumper between terminals 1 and 2 that was installed at the factory. It is required for the intended use of the automatic gas burner control system.

The bridge from pin 1 to pin 2 may be removed if it can be ensured that the maximum current for the entire application is less than 5 A. This must take into account all devices in use, such as valves, ignition transformers, relays for fault and operating displays, fans and the power consumption of the MPA itself.

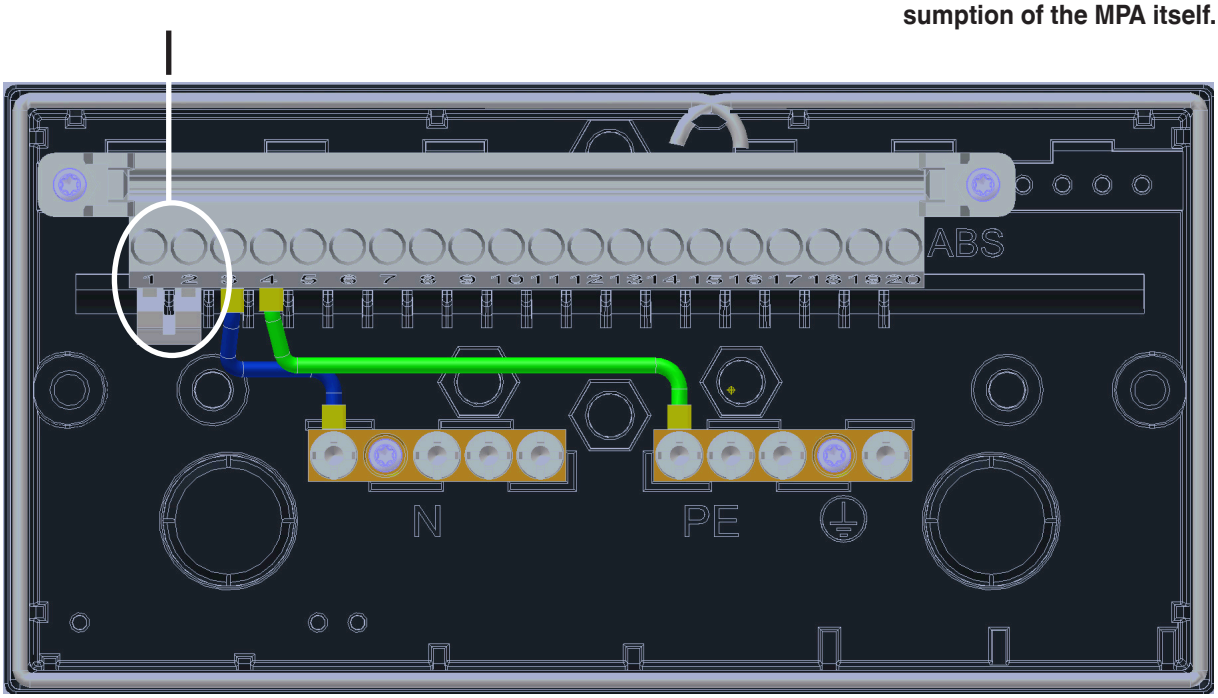

Connection diagram
MPA 412x

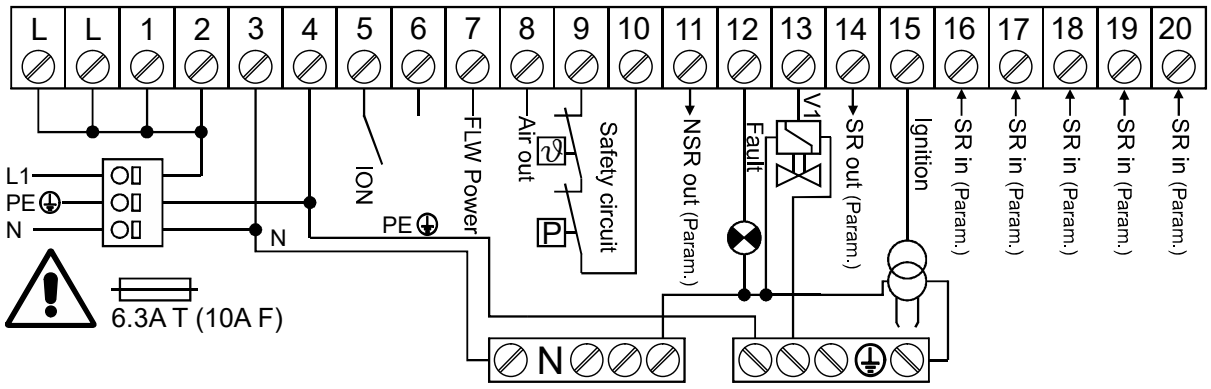

* The connection lines used must be suitable for an ambient temperature of at least 75 °C (167 °F).

** "Different functions can be configured for the inputs X16 to X20, see the chapter for the parameters P18, P26-P29. For the output X11, see chapter P19; for output X14, see chapter P38."

The mains switch of the MPA 4122 is not an disconnector within the meaning of DIN EN 60730.
Even in the OFF switch position, mains voltage is still present within the housing – risk of fatal electric shocks!
As a result, the power supply must be interrupted before opening the housing.

The MPA 4122 must be protected using a 10 A back-up fuse.

Technical data

Outputs*					
Designation	**Connection X**	**Safety-relevant**	**Output type**	**Line length**	**Electrical data**
V1 Main gas valve	13	●	Relay contact	Max. 100 m	115 / 230 VAC / 2 A cos φ = 1 Minimum load 0.5 W
V2 Safety gas valve	14	●	Relay contact	Max. 100 m	115 / 230 VAC / 2 A cos φ = 1 Minimum load 0.5 W
Ignition	15	●	Semiconductor contact	Max. 100 m	115 / 230 VAC / 2 A *2
Fan	8		Relay contact	Max. 100 m	115 / 230 VAC / 1 A cos φ = 0.4 corresponds to 115 / 230 VAC / 2.5 A cos φ = 1
Operation	11		Relay contact	Max. 100 m	115 / 230 VAC / 1 A cos φ = 1
Fault	12		Relay contact	Max. 100 m	115 / 230 VAC / 1 A cos φ = 1
Supply to flame detector device	7		For UV 41 (HE), UV 42 FLW 10 x, FLW 20 x, KLC20 / 230 VAC	Max. 100 m	230 VAC / 10 mA *1

*1: The flame detector device is also supplied with 230 VAC in the 115 VAC version via "Supply Flame Detector", terminal 7.

*2: With a pre-ignition time > 100 s or a duty cycle (DC) > 80 % of the ignition output, the maximum permissible output current is reduced to 1.5 A.

The total currents of all safety-related consumers must not exceed 5 A (note the safety value).

The total currents of all consumers must not exceed 6.3 A (10 A).

Inputs*					
Designation	**Connection X**	**Safety-relevant**	**Input type**	**Line length**	**Electrical data**
L1	1/2			Contact	
A	3			Contact	
PE	4			Contact	
Safety chain****	9+10	●	Potential-free contact	Max. 100 m	115 / 230 VAC / min. 5 A
Flame detector device 1 (Ionisation)	5	●	Ionisation for one or two-probe operation	Max. 10 m **	Threshold: approx. 1.2 µA
X16*** Configurable input, see chapter P26	16	●	Switching contact	Max. 100 m	115 / 230 VAC
X 17*** Configurable input, see chapter P18	17	●	Switching contact	Max. 100 m	115 / 230 VAC
X18*** Configurable input, see chapter P27	18	●	Switching contact	Max. 100 m	115 / 230 VAC
X19*** Configurable input, see chapter P28	19	●	Switching contact	Max. 100 m	115 / 230 VAC
X20*** Configurable input, see chapter P29	20	●	Switching contact	Max. 100 m	115 / 230 VAC

* The connection lines used must be suitable for an ambient temperature of at least 75 °C (167 °F).

** Use flame detector device 2 for line lengths > 10 m.
For special applications, ionisation line lengths of up to 50 m are possible on request.

*** The functions of the inputs X16-X20 can be configured

**** Pressure or temperature monitors must be looped in as potential-free contacts between the connections X9 and X10.

General				
Designation	**Input type**	**Electrical data**	**MPA 4114**	**MPA 41x2**
Connection L1 via replaceable back-up fuse		L1 fused via integrated fuse, 6.3 A slow-blow or 10 A fast-blow, breaking capacity H = 1 500 A	●	●
TWI interface	TWI	Connection only for VisionBox **NOT galvanically isolated!**	●	●
Switch for parameter mode	Bistable switch	ON/OFF switch in MPA	●	●
Display unit "Multi-function switch"	Within the housing	1 button with 2 LEDs	●	
Display unit	Within the housing for the integrated display	3 x 7 segments + 4 buttons		●
Display unit AM 41 (external display)		3 x 7 segments + 4 buttons Max. connection line length 10 m	●	

Ignition transformer connection
The MPA 41xx does not have an integrated ignition transformer.
For details of suitable ignition transformers, see the accessories list.

Attention: Depending on the electrode arrangement, a special ignition transformer may be required (e.g. single-electrode operation).

Ignition transformers from the DUNGS product range that are suitable for single-electrode operation have the type "SEO".

Flame monitoring and ignition
Connection of flame detector device 1

Single electrode operation, ionisation

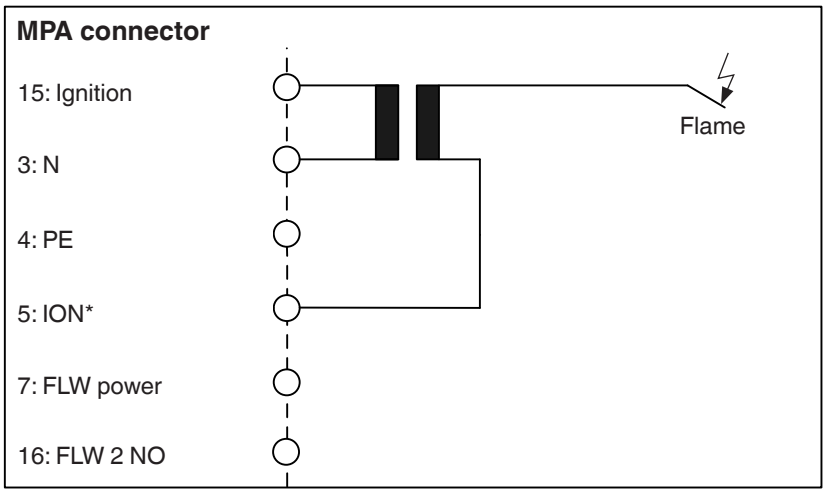

*When using a DUNGS DEZ 1xx SEO ignition transformer for single electrode operation, the green / yellow line must be connected to terminal 5.

Two electrode operation, ionisation

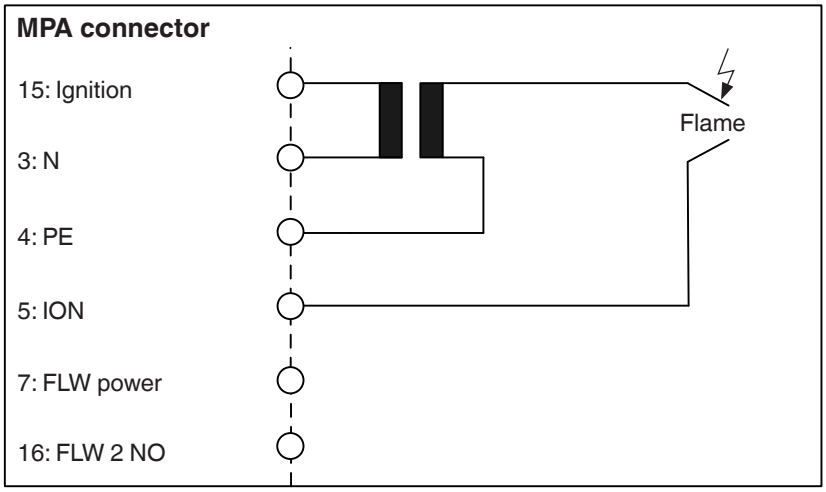

Connection of flame detector device

Flame detector devices UV 41 (HE) / FLW 10 IRx / FLW 20 UVx / KLC 20/230
FLW 10 and FLW 20 do not have a Earth (PE) connection.

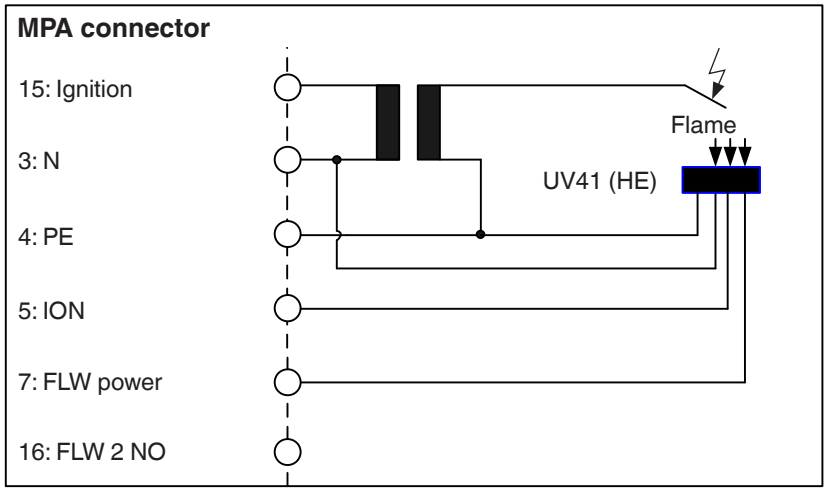

Connection of flame detector device 2

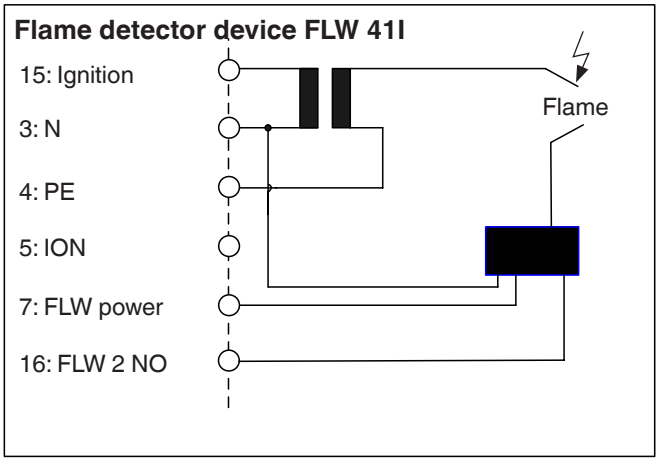

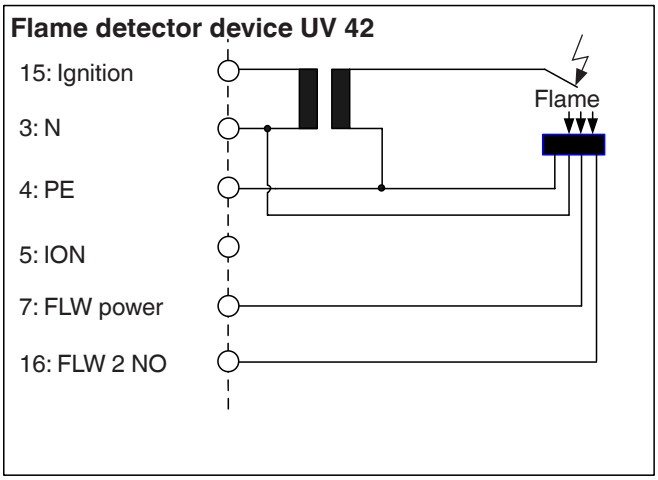

Use ignition lines with internal resistance (e.g. carbon fibre) or, in the case of ignition lines with a copper core, use ignition plugs with integrated interference suppression of at least 1 kΩ.

MPA 41xx installation

MPA 411x installation options:

- Direct screw connection of the base on the mounting surface. Break out mounting holes, e.g. using a suitable screwdriver or with a 4.2 mm (for screw M4) drill. During installation, use O-rings with 4.2 mm internal diameter to guarantee the IP protection.
- DIN rail mounting (locking the base into place on a DIN rail).

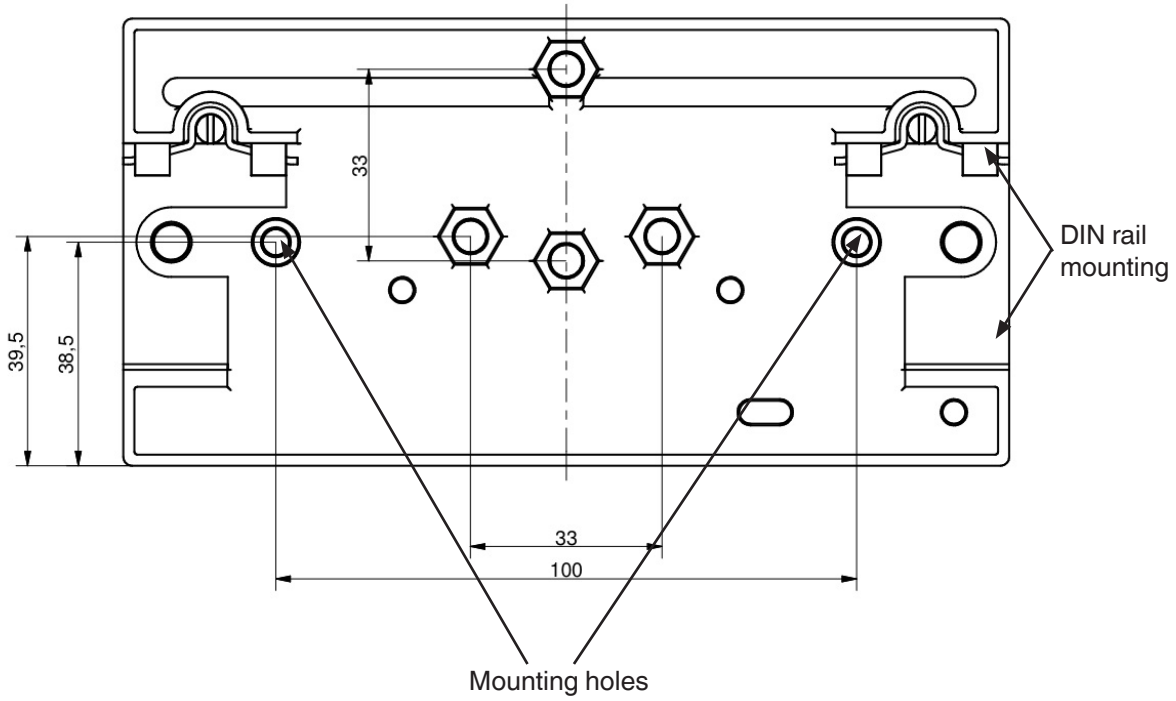

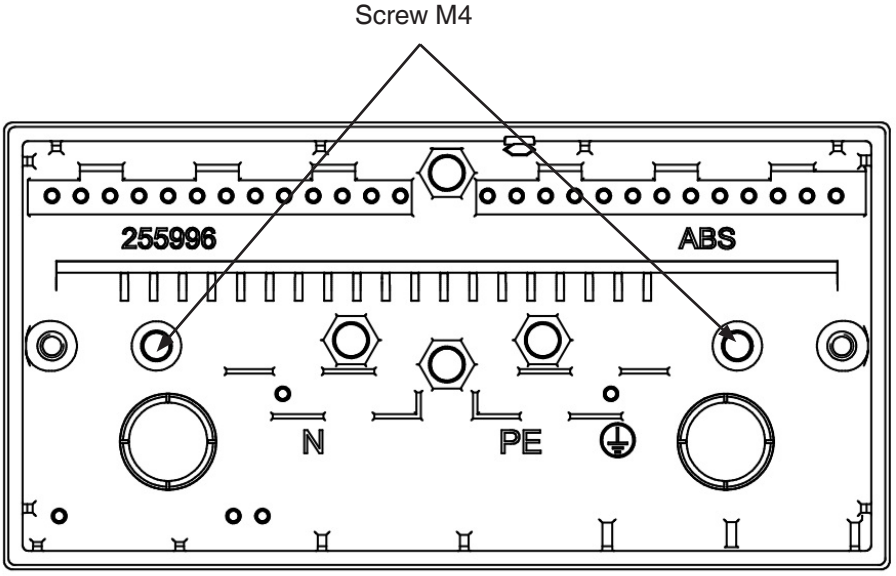

MPA 4114 dimensions

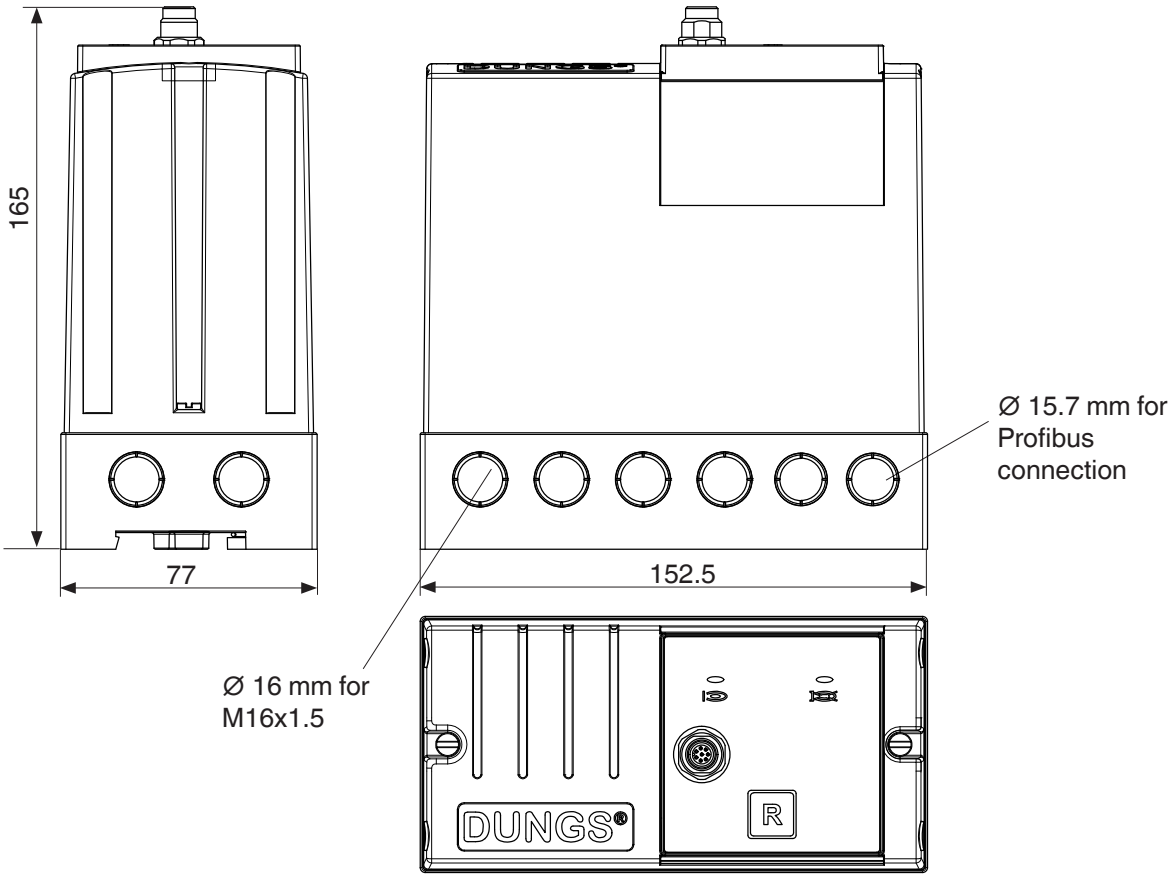

MPA 4112 dimensions

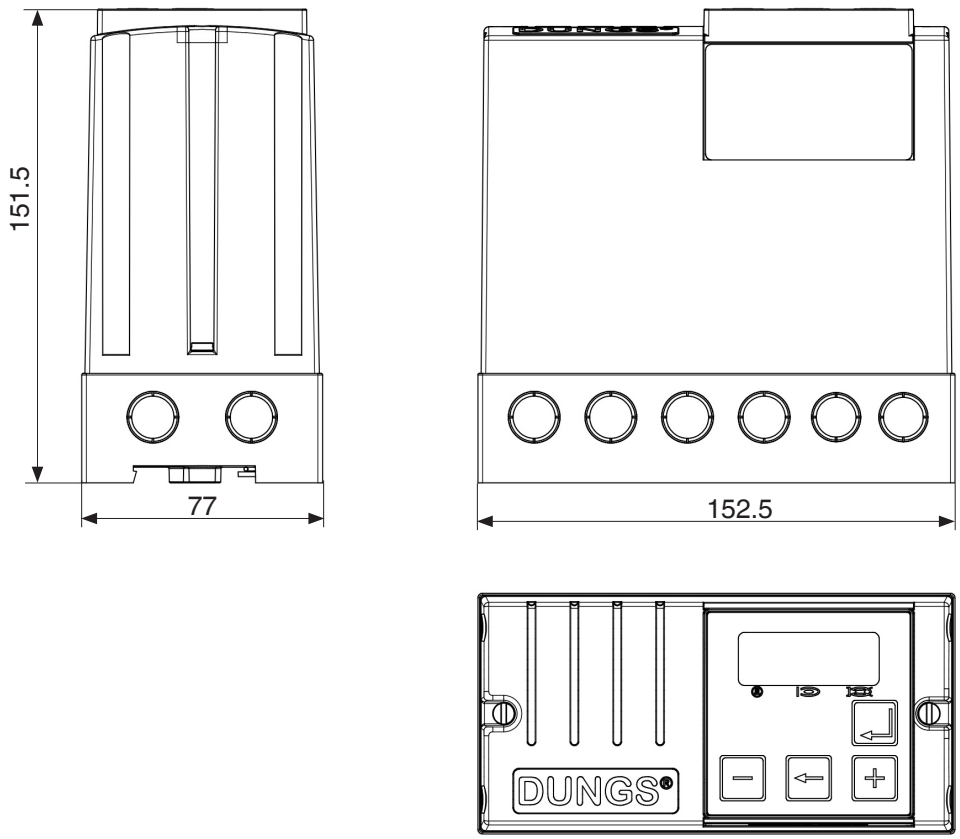

MPA 41xx installation

MPA 412x installation options:

- Direct screw connection of the housing to the mounting surface using M4 screws, min. length 20 mm

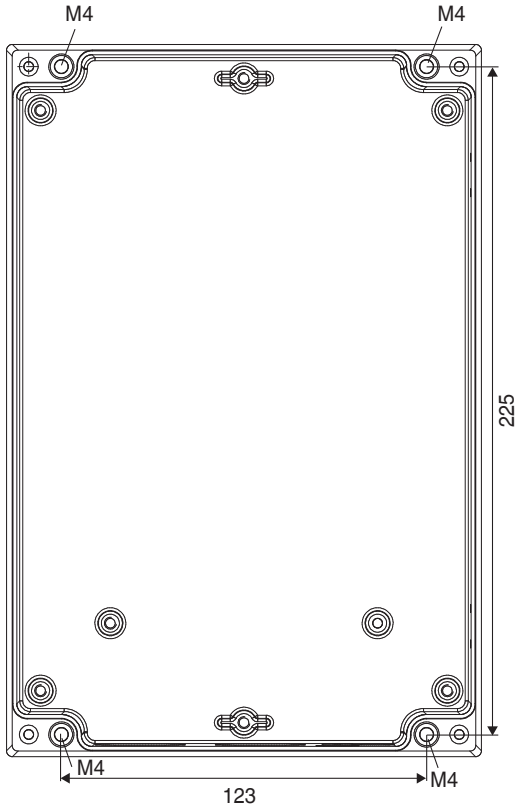

MPA 412x dimensions

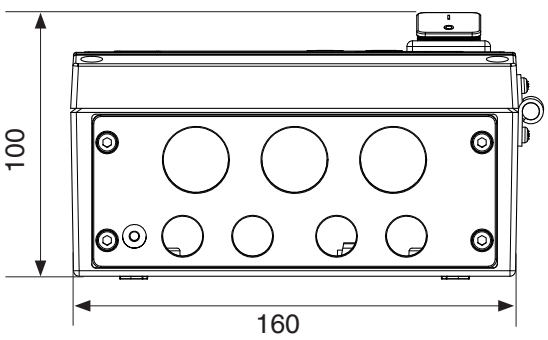

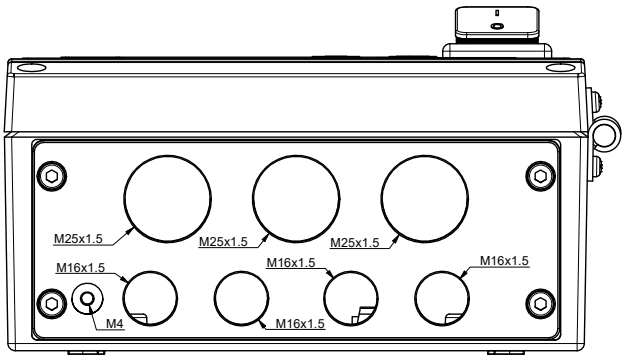

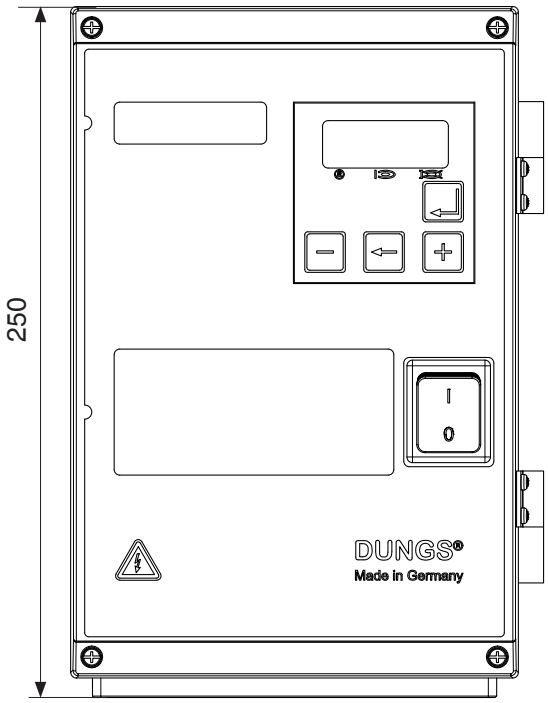

Display AM41
A cut-out of 68 x 68 mm is required for installation. Maximum material thickness 5 mm.
Display function identical to MPA 41x2



AM 41 plug assignment

PIN	1	2	3	4	5	6	7	8
Color	White	Brown	Green	Yellow	Grey	Pink	Blue	Red

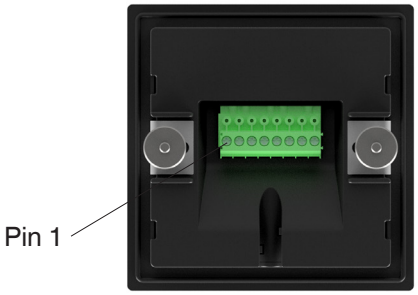

To connect the display, use connection line AM41 #298790 (max. 10 m).

MPA 4114 Connector Display



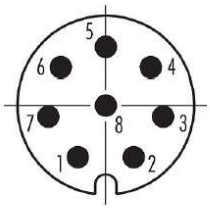

Description of functions

Unlock function

If the MPA is locked (state 0), it can be unlocked by pressing the unlock button. To distinguish this action from potential EMC interference pulses, the button must remain pressed for at least 0.5 s (max. 5 s).
The same applies for 230 V unlocking and unlocking via fieldbus modules.

In accordance with DIN EN 14459 (Annex J), the number of possible unlock actions is limited to 5 in 15 minutes, i.e. the automatic system denies any further unlocks if the MPA has already been unlocked 5 times within a short time period. Only after a waiting time during which the MPA is provided with power has elapsed is it possible to unlock the MPA again.

The waiting time is 15 minutes or 3 minutes for each unlock action.

Enhanced unlock

The described limitation to 5 unlock actions within 15 minutes can be reset by means of "enhanced unlocking". To do this, the unlock button must be pressed for at least 5 s (max. 10 s) (the display begins to flash after 5 s).

"Enhanced unlocking" is active in all operational states of the MPA. This means that "enhanced unlocking" can also be used to perform a safety shutdown with restart of the MPA during operation if a flame is present.

Enhanced unlocking is not possible via the 230 V unlocking input and via fieldbus modules.

Access level

In the MPA, write access is defined using access levels.
Each parameter has a corresponding access level. In order to change a parameter, the MPA must be at the assigned level or a higher level.
If the access level is insufficient to change a parameter, this is indicated on the VisionBox or a request to enter the valid password is shown on the MPA display. When working at higher access levels, users must press a button to confirm that they are on site. For this, the display flashes for 30 s until a button is pressed. If no button is pressed, the MPA remains at the previous level.

To change the access level, the correct password must be entered, either using the display (MPA 4112 / MPA 4122/ AM 41) or the VisionBox. The access level resets automatically after 5 hours or in the case of power failure. Exception: If the automatic gas burner control system restarts during this 5-hour period (e.g. due to an error), a new period of 5 hours starts for the user in the current access level.

NOTE
We recommend resetting the access level after the automatic gas burner control system has been configured successfully.

Level	Designation	Button press required
1	Dungs	yes
2	OEM expert	yes
3	OEM	yes
4	Service	yes
5	Operator	no

Gas valves
V1 to X13 and V2 to X14
The valve connection can be configured, see the section "Parameter description" – P38.

Multifunction display
The inputs X16-X20 can be freely assigned functions by setting the parameters P18, 26, 27, 28 and 29.
Each input can be assigned any function.
Each function can be assigned once.

Parameter mode (manual operation)
A switch in the connection chamber is used to switch between parameter and automatic mode.
The MPA will not register a change to the switch position until it is restarted.

After the mains power is connected, the display in parameter mode shows a prompt to enter a code. You must enter the password for the service or OEM level.

Once the level has been changed successfully, selected parameters are run through in sequence. An overview of the parameters and their sequence can be found in the section MPA 4122 Parameter display. The parameter values can be changed using the + and - buttons. The unlock button is used to save the displayed value. The ← button can be used to return to the previous position or parameter.
Since the display shows only two positions, some values are displayed at an optimised resolution. If the desired value cannot be displayed in this resolution, the display shows "– –". The value can be converted to a resolution that can be displayed.

Once all parameters have been set, a check of the parameter values starts automatically. The program stops in the pause states and a button press is required to continue (indicated by H1 to H5 on the display). The set parameter values are applied only once state H5 is reached.

If no button is pressed for 30 min while in parameter mode, the program attempts to restart.

Switch to "Auto"
When this switch position is selected, the MPA operates in normal mode.
If monitored parameters have been changed and not released, the MPA enters fault mode with error F 60.

MPA 411x

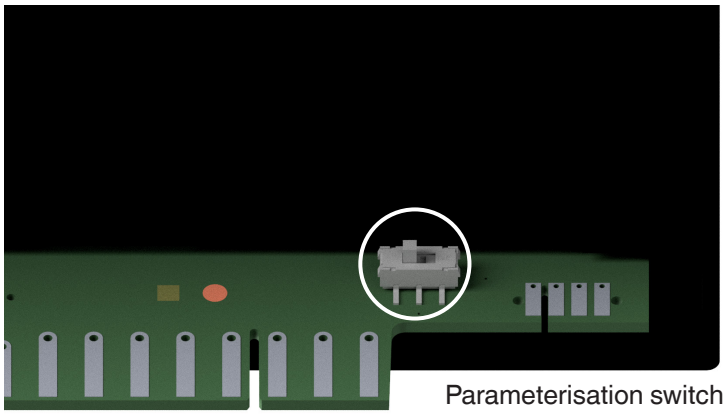

Parameterisation switch
Left position: "Auto"
Right position: "Para"

MPA 412x

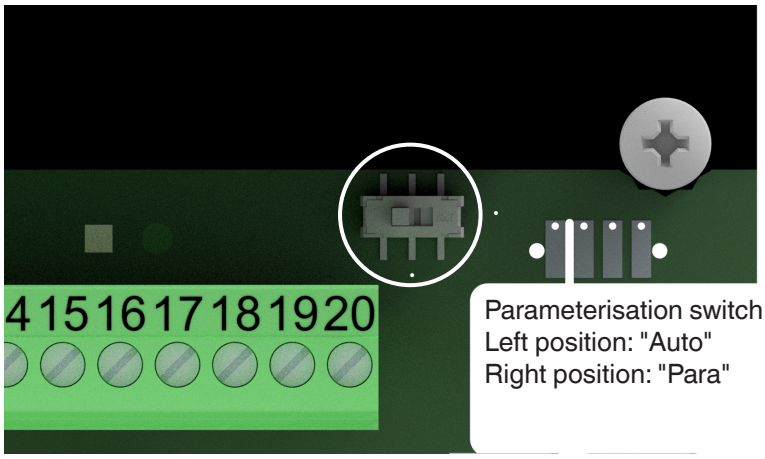

Parameterisation switch
Left position: "Auto"
Right position: "Para"

Flow diagram:
The program sequence may be modified by changing the parameters.

Attention
All settings must be made in accordance with the requirements of the applicable standards and the national requirements in place at the installation site.
DUNGS accepts no liability or guarantees for material or personal damage caused by improper use or by parameter settings made for the automatic gas burner control system.

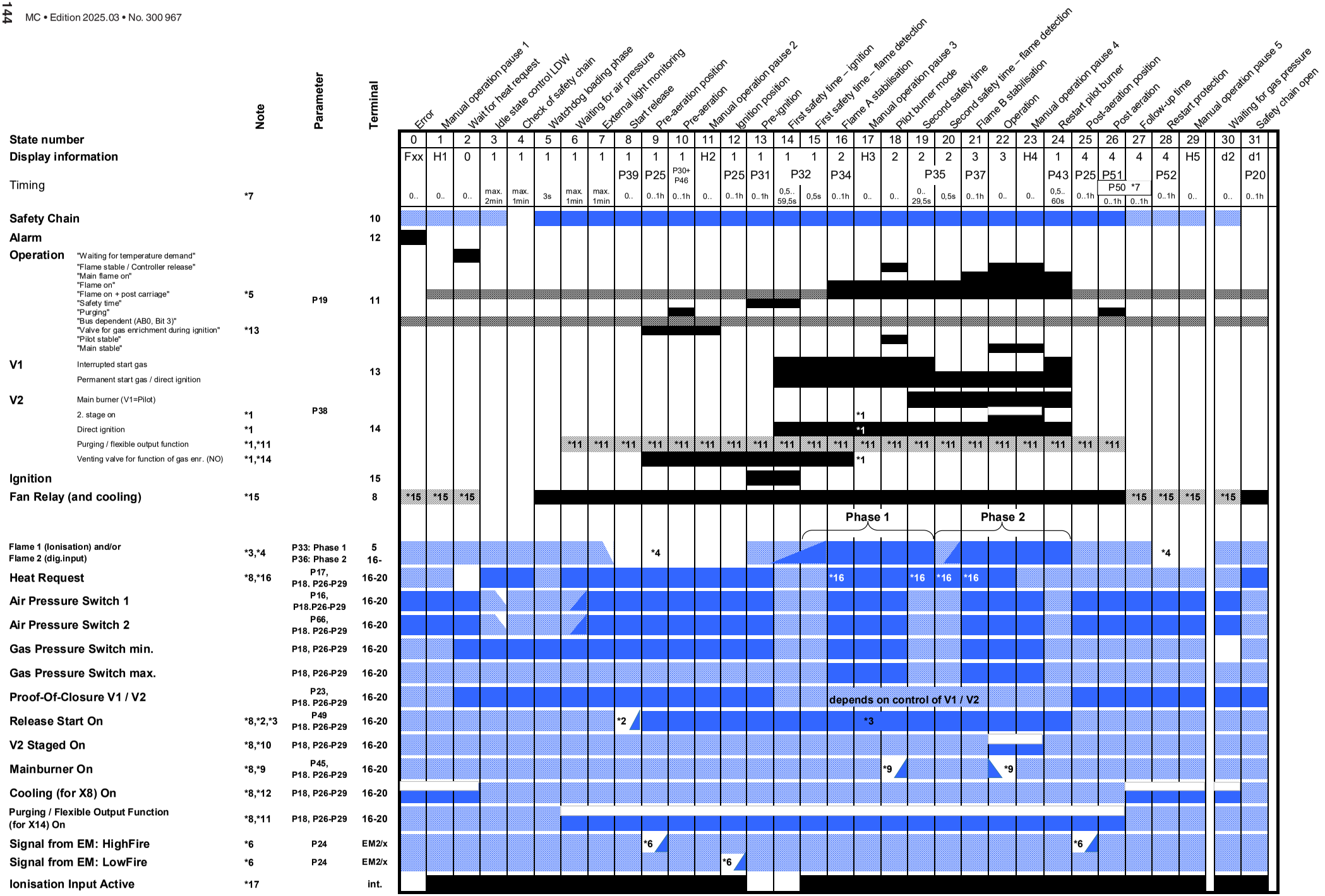
Note
Parameter
Terminal
Error
Manual operation pause 1
Wait for heat request
Idle state control LDW
Check of safety chain
Watchdog loading phase
Waiting for air pressure
External light monitoring
Start release
Pre-aeration position
Pre-aeration
Manual operation pause 2
Ignition position
Pre-ignition
First safety time – ignition
First safety time – flame detection
Flame A stabilisation
Manual operation pause 3
Pilot burner mode
Second safety time
Second safety time – flame detection
Flame B stabilisation
Operation
Manual operation pause 4
Restart pilot burner
Post-aeration position
Post aeration
Follow-up time
Restart protection
Manual operation pause 5
Waiting for gas pressure
Safety chain open
State number
Display information
Timing
*7
Safety Chain
Alarm
Operation
"Waiting for temperature demand"
"Flame stable / Controller release"
"Main flame on"
"Flame on"
"Flame on + post carriage"
"Safety time"
"Purging"
"Bus dependent (AB0, Bit 3)"
"Valve for gas enrichment during ignition"
"Pilot stable"
"Main stable"
*5
P19
*13
V1
Interrupted start gas
Permanent start gas / direct ignition
V2
Main burner (V1=Pilot)
2. stage on
*1
P38
Direct ignition
*1
Purging / flexible output function
*1,*11
Venting valve for function of gas enr. (NO)
*1,*14
Ignition
Fan Relay (and cooling)
*15
Flame 1 (Ionisation) and/or
Flame 2 (dig.input)
*3,*4
P33: Phase 1
P36: Phase 2
Heat Request
*8,*16
P17,
P18. P26-P29
Air Pressure Switch 1
P16,
P18.P26-P29
Air Pressure Switch 2
P66,
P18. P26-P29
Gas Pressure Switch min.
P18, P26-P29
Gas Pressure Switch max.
P18, P26-P29
Proof-Of-Closure V1 / V2
P23,
P18. P26-P29
Release Start On
*8,*2,*3
P49
P18. P26-P29
V2 Staged On
*8,*10
P18, P26-P29
Mainburner On
*8,*9
P45,
P18. P26-P29
Cooling (for X8) On
*8,*12
P18, P26-P29
Purging / Flexible Output Function
(for X14) On
*8,*11
P18, P26-P29
Signal from EM: HighFire
*6
P24
Signal from EM: LowFire
*6
P24
Ionisation Input Active
*17
5
16-
16-20
EM2/x
int.
Phase 1
Phase 2
depends on control of V1 / V2

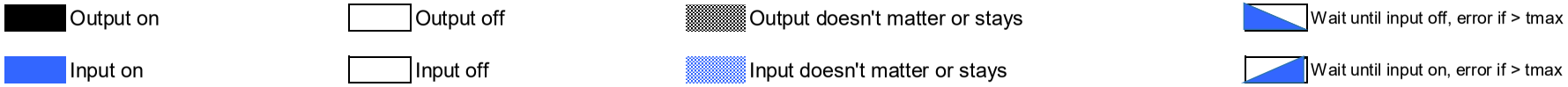

*1) If no pilot operation is configured (see P38), the second safety time is skipped and the MPA proceeds directly from "Pause 3" to "Operating" state.
*2) If the time set in P39 expires, the MPA performs a safety shutdown and attempts to restart. If the release signal is already preset directly upon state entry, the MPA performs a safety shutdown with restart attempt depending on P19.
*3) If the release signal is lost during operation, the MPA performs a safety shutdown with restart attempt depending on P49.
*4) Both flame inputs must be off.
*5) Runs for "Flame on" with 15 minutes follow-on after a normal shutdown. After 24 hours OFF, the signal is activated for 1 minute.
*6) If the time set in P25 expires, the MPA performs a safety shutdown and attempts to restart.
*7) The follow-up time already starts in the "Post-aeration" state. If the post-aeration is greater than or equal to the follow-up time, the "Follow-up time" state is skipped.
*8) The signal can also be provided via fieldbus.
*9) If an input is assigned the "Main burner on" function, the MPA pauses in the state "Pilot operation". If the signal becomes active, a switchover is performed to main operation via the second safety time and the configured flame(s) is / are monitored for phase 2. If the "Main burner on" signal falls away again, the system switches back to flame detection or ignition (depending on P45) via the state "Restart pilot".
*10) Depending on the input signal "V2 stepwise on" V2 can be switched on and off in the operating state if P38 is configured for "two-step operation".
*11) The flexible control X14 is possible only in the indicated states.
*12) Monitoring of the LDW can be configured via P16 / P66 in the cooling with a tolerance of approx. 1.5 s. The response of the MPA can be set using P63.
*13) To grease the mixture for ignition, X11 is used to build up air pressure during pre-aeration. This air then presses on the regulator in the MBC.
*14) For the greasing function, output X14 is used as a vent valve.
*15) Indicates the state in which a cooling function can use the switching of the fan or air valve output. A "Cooling" switch input or bus signal (for X8) is required in this case.
*16) If a minimum operating duration is configured in parameter P44, a loss of the heat request is ignored in the indicated state.
*17) Switch from ionisation input to PE during ignition

Configuration of multifunction inputs X16 to X20
The inputs on terminals 16 to 20 are not assigned fixed functions and can instead be defined using corresponding parameter settings.

Each function can be used only once. The functions can influence or exclude each other.
The parameters relevant for parameter setting are P18 and P26-P29.
Note: If the five available hardware inputs are insufficient, check whether certain functions can be controlled by a fieldbus signal.

Function: Air pressure detectors LDW1 and LDW2
The functions of air pressure detector 1 (LDW1) are configured using parameters P18 and P26-P29.
Monitoring of air pressure can be configured in the programming steps (states) start-up, operation, post-aeration and in idle state control using P16.
If the air supply to the burner is maintained during non-burner operation (outside of burner start-up and operation) – for example, to cool the system – this can also be monitored.

Setting
A multifunction input can be used to configure a second LDW2 that is independent of LDW1.
The actively monitored program states are defined using parameter P66.

Function: Gas pressure detector with minimum operating pressure (GDWmin)
The function GDWmin monitors the minimum fuel pressure required for safe operation. If the required value is not met during start-up or in standby mode, the program state "Waiting for gas pressure" is activated.
If the gas pressure is lost during start-up, an error message is also entered in the error memory.
If pressure is lost during operation, a normal shutdown occurs.
The system exits the state "Waiting for gas pressure" only once gas pressure has been detected again.

Function: Check closed valve state (POC)
The system monitors the limit switch contact signal for a fuel valve.
The tolerance from activation of the valve output to receipt of the signal can be configured using P23. If no signal is detected within the configurable time, the system performs a safety shutdown.
Attention: The total closing time required for the application must be taken into account.
The POC function can be set separately for V1 and V2.

Function: Start release
The burner start-up is not initiated until a signal is present on the configured input.
This function is therefore suitable for integrating an upstream valve check system in the burner start-up or for synchronising multiple burners.
The signal is activated via a multifunction input or via a fieldbus signal (P64).
In the state "Release start", the system waits for the time defined in P39 until the release signal is present.
If this time expires without a release signal, the system performs a restart.
At the start of this state, an idle state control (signal OFF) can be set via P47.

If the signal needs to continue being monitored during the rest of the start-up process and during operation, this can be configured via P49.

Function: Safety valve V2 stepwise on
The safety valve is activated via a multifunction input or fieldbus signal (P64).
Activation can be performed only in the operating state.
P38 is set to "Stepwise operation, V1 on V2 on/off".
Function: Main burner on
The main burner is activated via a multifunction input or fieldbus signal (P64). Activation is possible only in pilot mode (V1 open, flame detected).
P38 is set to pilot mode (with interrupted or permanent start gas).
Flame monitoring for pilot mode (= phase 1) and main mode (= phase 2) can be set using parameters P33 and P36. To switch back from main mode to pilot mode, the main burner is switched off using a signal.
P45 specifies whether the ignition is switched on to start the pilot burner.

Function: Air purge on (acts on output X14)
The air purge is activated via a multifunction input or fieldbus signal (P64). Activation is possible only during start-up from the state "Wait for air pressure" to "Post-aeration" and is otherwise ignored.
P38 is configured for "Direct ignition, V1 on, V2 = X14 for air purge".

Function: Flame monitoring
Two flame signals can be connected to the MPA.
Flame detector device 1:
Ionisation input X5.
Flame detector device 2:
Single-pole digital input (NO) or two double-pole digital inputs (NC / NO) X16 to X20.

The ionisation signal has a fixed assignment to connection X5.
This input is suitable for connecting an ionisation electrode or for flame detector devices that simulate an ionisation current, such as UV41, FLW20, KLC20/230 etc.
A digitally switching flame detector device (flame detector device 2 – FLW 2) can either switch only the operating mode contact NO or additionally switch the idle state contact (NC).
The flame detector device must be suitable for switching mains voltage.
See also the "Flame detector device" annex.
The flame monitoring performed by the automatic gas burner control system is divided into two phases. Phase 1 is the pilot burner mode; phase 2 is the main burner mode.
The corresponding flame detector device can be assigned using the parameters P33 (= phase 1) and P36 (= phase 2). This can also be done using AND/OR operations.
If a UV41 or UV42 is to be used in continuous operation (> 24 h uninterrupted operation), an additional UV 4x EM 1/1 shutter module must be used.
The shutter is controlled using an extension module integrated into the MPA 41xx. The flame detector device tested with the shutter is set using P21.

Function: Heat request
The heat request is activated (P17) via a multifunction input or fieldbus signal (P64).
A combination of bus and hardware signal is possible.
Preferential cooling can be set using P65.
In this case, the automatic gas burner control system does not start up when a heat request is received.
If the heat request is not present at the beginning of start-up, the system switches back to the start-up standby position.
If the heat request cuts out shortly before ignition, the restart protection causes the system to switch back to the start-up standby position.
If the request cuts out after the valves have already been opened, a normal shutdown is performed via the post-aeration.
If a repeat heat request is issued during the post-aeration, the system responds by cancelling the post-aeration time only if the restart protection time P52 is configured as 0.

Function: Remote unlock
The remote unlock is activated via a multifunction input or fieldbus signal (P64).

Function: Gas pressure detector with maximum operating pressure (GDWmax)
The function GDWmin monitors the minimum fuel pressure required for safe operation.
The signal is monitored actively during operation.

Input for safety chain X9 and X10
Connection for limiters or breakers such as pressure monitors, temperature limiters, pressure limiters.
The switches must be suitable and tested for the required function. The switching capacity must be > 5 A.
If no switch / limiter is used, X9 must be bridged with X10.

Configuration of multifunction outputs X1/8 to X1/13 and X1/14

Function: Cooling (with X8) on
The burner or furnace can be cooled by opening the combustion air supply.
In the states start-up standby, restart protection, waiting for gas pressure and fault, the fan / air valve (x8) output can be opened to provide cooling.
The cooling function is activated via a multifunction input or bus signal (P64).
The response to LDW errors during cooling is defined using P63.
The cooling function can also be activated when the safety chain is still open (terminals 9, 10). During start-up, output X8 is briefly switched off for the LDW check. If the LDW check was successful and during burner operation, output X8 is always active.

Parameter P65 specifies the prioritisation between cooling function and heat request.

Function of outputs X13 and X14
Parameter P38 can be used to configure the function of the valve outputs.

1.
When using the setting with pilot gas valve (interrupted or permanent start gas), the second safety time, including a second stabilisation time, is observed during the state flow. This time is skipped when using other operating modes.
If the "Main burner on" input function is also configured, the state flow pauses in pilot mode and waits for the signal to proceed in main burner mode.

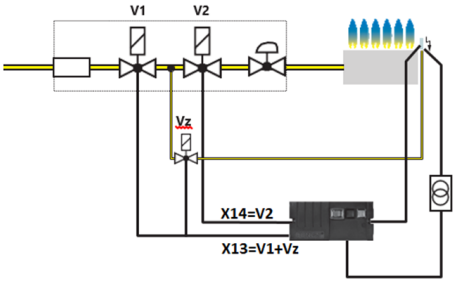

2.
For the "Direct ignition" option, V1 can be connected to X13 and V2 to X14.

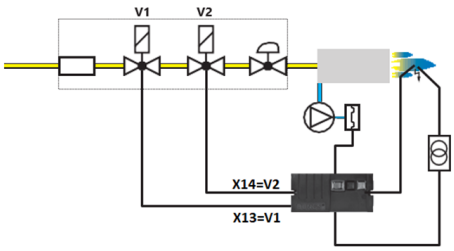

3.
For the option "Direct ignition, V1 on, V2 = X14 for air purging", both valves V1 and V2 must be connected to output X13.
In this case, the power consumption of the valves must be taken into account in particular.
Output X14 is controlled by a signal, see the above description of the function "Air purge (with X14) on".

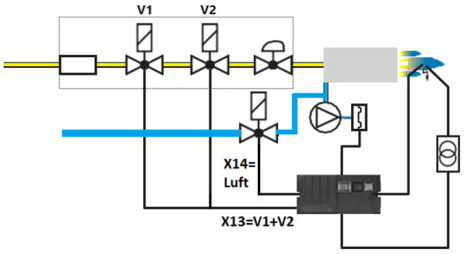

4.
For the option "Direct ignition, V1 on, V2 = for fuel enrichment", both valves V1 and V2 must be connected to output X13. Output X14 is then active from pre-aeration to the stabilisation time, i.e. a vent valve V4 (NO valve) is closed here for the fuel enrichment. The valve is thus closed during pre-aeration, during ignition and until shortly prior to operation to maintain the pressure built up during pre-aeration. The built-up pressure is applied to the gas pressure regulator, which provides a higher gas quantity as a result. The pressure must subsequently be vented safely to avoid a gas surplus during operation.
Value V3 is controlled by output X11 and is opened during the pre-aeration time if P19 is set to the function "Valve for greasing function during ignition".
Attention: Valve V3 must be fitted with a nozzle to prevent unburned gas from escaping in the case of a fault. The maximum quantity must not exceed 50 l / h.

V3
Open: During pre-aeration, otherwise closed -> pressure builds up

V4
Open: Until prior to pre-aeration -> venting
Closed: Pre-aeration to stabilisation time -> pressure on regulator -> greasing for ignition
Open: In operation and in normal shutdown -> venting

Ignition output X15
The ignition output is activated depending on the program state
Ignition can be activated by P31 prior to the opening of the valves (previous page).

If the main burner needs to be switched off during operation and the ignition burner started again, this behavior is activated using P45.

Output for air fan / air valve X8
The fan or air valve output is activated depending on the program state. The output can be used as a cooling function (with X8) in a fault state or in standby mode (wait for heat request).

Output for operation X11
The operation output can be configured individually (P19)
Attention: Not approved for the switching of safety-related functions.

Output for alarm / fault X12
The output is activated in a fault state / when the automatic gas burner control system is locked.
Attention: Not approved for the switching of safety-related functions.

State description		
MPA 41xx		
State xx Display	**Designation**	**Description**
00 Fxx	**Errors**	If the automatic gas burner control system is in this state, an error is present. The display automatically switches to the error screen and shows the current error (e.g. "F11") instead of the state number.
01 H1	**Manual operation pause 1**	If the switch for parameter mode is on "Para", the MPA stops in this state. The user must press the "Next" button (unlock button) to confirm that they want to switch to the next state. If no button is pressed for 30 minutes, the automatic gas burner control system restarts or enters fault mode. Manual operation can be cancelled only by passing through all states and resetting the parameter switch to normal mode. If the parameter switch is reset prior to reaching state H5 and parameters have been changed, they are not yet released and the automatic gas burner control system enters fault mode (see also P10).
02 0	**Wait for heat request**	The automatic gas burner control system is ready for operation, but no heat request is present.
03 1	**Idle state control LDW**	Depending on the operating mode of the LDW (P16), a check is performed for whether the LDW is reporting "no air pressure". Max. waiting time 2 min. → restart attempt.
04 1	**Check of safety chain**	In this state, a check is performed for whether the safety chain is free of potential. The fan relay is still open and the watchdog relay is not yet picked up. If the safety chain is not free of potential, the system waits a maximum of one minute and then attempts to restart.
05 1	**Watchdog loading phase**	The safety-related watchdog circuit is activated. If the safety chain is interrupted → state 25.
06 1	**Waiting for air pressure**	The air pressure must be applied within a maximum state time of 1 min, otherwise the system attempts to restart.
07 1	**External light monitoring**	Start of external light monitoring. Monitoring is active from state 7 to state 9. If external light is detected in state 7, the start-up is stopped for a maximum of one minute. If the flame signal goes out during this time, the start-up sequence is continued. If the signal continues to be present, the system performs a safety shutdown with malfunction interlock. In states 8 and 9, an external light signal is followed by an immediate non-volatile lock-out and restart.
08 1	**Start release**	If an input (X16 to X20) is assigned the function "Start release on", the automatic gas burner control system stops the start-up process at this point and waits for the start release for the length of time defined in P39 (infinity is also possible). If this time expires, the system performs a safety shutdown and attempts to restart. If is also possible to activate an idle state control upon state entry via P47 and to monitor the signal for "ON" in the following states via P49. The input signal can, for example, be used to connect the release signal for a configured start-up check of the VPM (valve check module) (connection with shutdown check is not possible). It is also possible to provide a start release signal via fieldbus (selection via P64).

State description		
MPA 41xx		
State xx Display	**Designation**	**Description**
09 **1**	**Pre-aeration position**	If an EM 2/6 or EM 2/8 is used, it is possible to wait in this state, which can be activated via P24. P248 defines the wait status. P248=0: The system waits for an end stop signal at input EM 2/6: “HighFire”. P248>0: This set time is waited for The maximum timeout for the state until the safety shut-down with restart attempt is configured in P25.
10 **1**	**Pre-aeration**	This state provides sufficient pre-aeration. The action is performed for the duration specified in the parameters "Pre-aeration" (P30) and "Pre-aeration B" (P46). "Pre-aeration B" is a parameter at the OEM level; "Pre-aeration" is at the service level.
11 **H2**	**Manual operation pause 2**	If the switch for parameter mode is on "Para", the MPA stops in this state. The user must press the "Next" button (unlock button) to confirm that they want to switch to the next state. If no button is pressed for 30 minutes, the automatic gas burner control system restarts or enters fault mode. Manual operation can be cancelled only by passing through all states and resetting the parameter switch to normal mode. If the parameter switch is reset prior to reaching state H5 and parameters have been changed, they are not yet released and the automatic gas burner control system enters fault mode (see also P10).
12 **1**	**Ignition position**	If an EM 2/6 or EM 2/8 is used, it is possible to wait in this state, which can be activated via P24. What is waited for is defined in P248. P248=0: The system waits for an end stop signal at input EM 2/6: “LowFire”. P248>0: This set time is waited for The maximum timeout for the state until the safety shut-down with restart attempt is configured in P25.
13 **1**	**Pre-ignition**	Ignition is already activated for the duration of parameter P31 without a valve being open.
14 **1**	**First safety time – ignition**	In this state, gas valve V1 is opened. The state duration is P32 – 0.5 s.
15 **1**	**First safety time – flame detection**	The process for flame detection starts after the ignition is deactivated. For phase 1 (states 12 to 14), parameter P33 defines which flame detector input or which combination is active. If an ionisation current is present or a digital input is switched (depending on the set configuration), the MPA reports a flame. The state duration is 0.5 s.

State description		
MPA 41xx		
State xx Display	**Designation**	**Description**
16 2	**Flame A stabilisation**	The flame can stabilise in this state. The duration of the stabilisation phase can be configured in parameter 34.
17 H3	**Manual operation pause 3**	If the switch for parameter mode is on "Para", the MPA stops in this state. The user must press the "Next" button (unlock button) to confirm that they want to switch to the next state. If no button is pressed for 30 minutes, the automatic gas burner control system restarts or enters fault mode. Manual operation can be cancelled only by passing through all states and resetting the parameter switch to normal mode. If the parameter switch is reset prior to reaching state H5 and parameters have been changed, they are not yet released and the automatic gas burner control system enters fault mode (see also P10).
18 2	**Pilot burner mode**	If a pilot burner is configured with parameter P38 (using the value 1 or 0) and a hardware input (X16-X20) or the fieldbus control is configured for the function "Main burner on" using parameter P64, the automatic gas burner control system stops in this state. The pilot flame burns and is monitored. Once a hardware or bus signal is present for "Main burner on", the MPA switches to the second safety time in order to start the main burner. In this state, flame monitoring continues with phase 1 (P33). The total operating time (P40) is also taken into account, see "Operating" state.
19 2	**Second safety time**	In this state, gas valve V2 is opened. The state duration is P35 – 0.5 s. Note: The states for the second safety time including stabilisation B are executed only if the pilot or main burner (value 0 or 1) is configured using P38.
20 2	**Second safety time – flame detection**	The process for detecting the second flame is started. If an ionisation current is present or a digital input is switched on (depending on the configuration), the MPA reports flame 2. The state duration is 0.5 s.
21 3	**Flame B stabilisation**	Flame 2 can stabilise in this state. The duration of this stabilisation phase (P37) can be configured.
22 3	**Operation**	The automatic gas burner control system is now in operation or main burner operation. A voluntary shutdown can be activated after a defined time using parameter P40. If this time is set to the maximum of 23 hours and 59 minutes, the MPA operates in intermittent mode.
23 H4	**Manual operation pause 4**	If the switch for parameter mode is on "Para", the MPA stops in this state. The user must press the "Next" button (unlock button) to confirm that they want to switch to the next state. If no button is pressed for 30 minutes, the automatic gas burner control system restarts or enters fault mode. Manual operation can be cancelled only by passing through all states and resetting the parameter switch to normal mode. If the parameter switch is reset prior to reaching state H5 and parameters have been changed, they are not yet released and the automatic gas burner control system enters fault mode (see also P10).

State description		
MPA 41xx		
State xx Display	**Designation**	**Description**
24 1	**Restart pilot burner**	If the "Main burner on" signal is not present during the "Main burner" operating state, the pilot burner is restarted. For this, the pilot valve V1 is reopened. Parameter P45 can be used to configure whether the ignition is switched on for this (i.e. the automatic gas burner control system returns to the "Ignition" state). If not, the system skips directly to the "Flame detection" state after this state. The state time is defined using parameter P43.
25 4	**Post-aeration position**	If an EM2/6 or EM2/8 is used, it is possible to wait in this state, which can be activated via P24. What is waited for is defined in P248. P248=0: The system waits for an end stop signal at input EM2/6: “HighFire”. P248>0: This set time is waited for The maximum timeout for the state until the safety shutdown with restart attempt is configured in P25.
26 4	**Post-aeration**	In this state, the system performs post-aeration of the combustion chamber. The gas valves are closed as of this state. The fan continues to run in this state and does not switch off until the following state.
	Post-aeration (P51) can be interrupted by a new heat request if the restart protection (P52) has been set to 0 and the follow-up time (P50) has already expired.	
27 4	**Follow-up time**	During this time (P50-P51 > 0), a flame signal may still be present from the previous mode due to existing residual gas in the combustion chamber, for example. External light monitoring does not start until the following state. The follow-up time starts in the post-aeration state. If the post-aeration is equal to or greater than the follow-up time; then the follow-up time state is skipped.
28 4	**Restart protection**	In this state, the system waits until parameter P52 has finished. This prevents an immediate restart of the automatic gas burner control system if a heat request is active. The flame must no longer be detected in this state; otherwise, the MPA reports an external light error.
29 H5	**Manual operation pause 5**	If the switch for parameter mode is set to "Para", all parameters are set and the automatic gas burner control system has run through the entire process, the system stops in this state. The set parameter values are now applied automatically. The parameter switch can now be set back to "Auto" mode. Alternatively, the user can press the "Next" button (unlock button) to restart the parameter setting process from the beginning. If no button is pressed for 30 minutes, the automatic gas burner control system restarts or enters fault mode.
30 d2	**Waiting for gas pressure**	If the automatic gas burner control system is configured for use with a gas pressure switch (GDW), it changes to state 30 when a lack of gas is detected in states 1 to 10. It does not return to state 1 until sufficient gas pressure has built up. When starting from an operating state, the MPA runs through the post-aeration, follow-up time and restart protection states before changing to state 30.

State description		
MPA 41xx		
State xx Display	**Designation**	**Description**
31 d1	**Safety chain open**	The automatic gas burner control system remains in this state for the time set in parameter P20 if it does not detect a closed safety chain. Once the time has expired, the system uses P15 to decide whether immediate locking should take place or a restart. If the safety chain closes before the time set for P20 has expired, the MPA changes to state 1 to check the safety chain again. In this state, the fan relay is active / the fan is running.

Parameters

Parameter change

Parameter types
1-bit parameter (U1) – setting 0 and 1 (indicated as ON/OFF on the display), no limits
8-bit parameter (U8) – value setting within variable limits
16-bit parameter (U16) – value setting within variable limits.

A parameter can be changed using the display on the MPA 4112 / MPA 4122, the AM 41 display on the MPA 4114 or the VisionBox software on a PC.

The access level assigned to a parameter must be present in order to change the parameter.

The value must be within the variable limits; a value outside these limits is not possible.
At access level 2 (OEM expert), it is possible to change the variable upper and lower limits. The variable limits may be changed only by using the VisionBox, not on the MPA display. The outer bounds for variable limits are restricted by fixed limits. which cannot be changed.

To change a parameter that cannot be modified during normal operation, it is necessary to change to the state "Waiting for heat request".
Most parameters are monitored in automatic mode (switch on the PCB is set to "Auto"). The MPA detects changes to the values and immediately changes to malfunction interlock (error F 60). Value changes must be released in parameter mode together with a manual program run (refer also to the parameter table).
As of the "OEM" access level, it is possible to release parameter changes directly using P10 "Release parameter settings".

Parameters			
Parameter description			
Parameters	**Designation**	**Description**	**Setting / Examples**
P10	**Release parameter settings**	Direct release of the parameter set without using parameter mode (parameter switch set to "AUTO"). Use of the OEM level is required to release parameters directly.	Value range: 0: No, do not release 1: Yes, release parameter **Attention:** Following the release, the MPA resets the value to "0".
P11	**Fieldbus address configuration**	Setting of the bus slave address of the MPA If an invalid address is set for the connected bus module and the MPA is in automatic mode, a restart attempt is initiated (error F 18). If an invalid value is set for the connected bus module and the MPA is in parameter mode, an error message is generated. When viewing the operating and error display, the current bus address can be seen by pressing the ← button.	Value range: OFF (no fieldbus present) 0 to 254 (e.g. Profibus setting range from 1 to 126) Note: Changes to the values for this parameter are not applied until a restart takes place.
P12	**Number of restart attempts or anti-oscillation counter**	Number of MPA restart attempts. If the most recent restart was unsuccessful, the MPA locks and changes to a non-volatile lock-out (state 0 "Error"). The anti-oscillation counter is reset when returning to the operating state or when the MPA is unlocked.	Value range: 0-5 restart attempts
P13	**Number of restart attempts when flame is missing after the safety time for start-up**	A restriction can be placed on the number of restart attempts after flame creation (P12) for cases in which the flame is still missing after the first safety time for start-up. The restart counter and the anti-oscillation counter are reset when changing to the operating state or after unlocking.	Value range: 0-2 restart attempts Example: P12 = 5, P13 = 1 No flame is generated during the first start phase → 1st restart attempt → error idle state control LDW → 2nd restart attempt → error idle state control LDW → 3rd restart attempt → After the third restart attempt LDW OK, there is still no flame present → The automatic gas burner control system locks even though the number of restart attempts (P12) has not yet been reached. This is because the number of restart attempts when flame is missing has been reached.

Parameters			
Parameter description			
Parameters	**Designation**	**Description**	**Setting / Examples**
P14	**Number of restart attempts after flame lift-off or missing flame after the second safety time for start-up**	A restriction can be placed on the number of restart attempts (P12) for cases where a flame lift-off occurs or the flame is still missing after the second safety time for start-up. The restart counter and the anti-oscillation counter are reset when changing to the operating state or after unlocking.	Value range: 0-1 restart attempts Example: P12 = 5, P14 = 1 Flame lift-off during operation → 1st restart attempt → error idle state control LDW → 2nd restart attempt → error idle state control LDW → 3rd restart attempt → After the third restart attempt LDW OK, there is still no flame present → The automatic gas burner control system locks.
P15	**Locking with open safety chain**	If the safety chain is not closed and the heat request is set, the MPA waits in state 31 (safety chain open) If the safety chain is still open after the configurable time (P20) has elapsed, the system either switches to a malfunction lockout or restarts (depending on the anti-oscillation counter).	This setting also applies if the safety chain is opened after state 4. Setting: 0: Restart attempt, depending on the anti-oscillation counter 1: Immediate malfunction lockout Note: If P15 is set to restart, this is ignored if P12 is set to 0.
P16	**Operating mode for air pressure detector 1 (LDW 1)**	Air pressure monitoring can be activated during start-up (states 6 to 13) and/or during operation (states 16 to 18 and 21 to 23) and/or during post-purge (states 25+26) as well as during cooling in standby (states 27...30 and 0...2). The same applies to the standby control (state 3).	Value range: Monitoring during: Bit0: Idle state control Bit1: Pilot burner mode Bit2: Main burner mode Bit3: Startup Bit4: Post-aeration Bit5: Standby during cooling Bit6: Only pre-aeration Bit7: Only post-aeration

Parameters			
Parameter description			
Parameters	**Designation**	**Description**	**Setting / Examples**
P17	**Temperature controller: Operating mode**	This parameter configures whether the heat request is issued to the MPA via a fieldbus signal or using the HW input "heat request" / "temperature controller".	Setting 0: Only the "heat request" hardware input is active, the bus signal for the heat request is ignored. Setting 1: The bus signal for the heat request is active. However, the burner can start only if the HW signal is also present. If the bus connection is lost, a normal shutdown is carried out after a tolerance period of 10 s. Setting 2: The bus signal for the heat request is active. If the bus signal is lost, the system switches over to the HW signal after a tolerance period of 10 s. Setting 3: Only the bus signal for the heat request is relevant. If the bus connection is lost, a normal shutdown is carried out after a tolerance period of 10 s. Setting 4: Only the bus signal for the heat request is relevant. If the bus connection is lost, a safety shutdown with malfunction interlock is carried out after a tolerance period of 10 s. **ATTENTION**: In contrast to Profibus, no cyclical communication occurs when using Modbus. Since the MPA only expects one Modbus request each minute, a disconnection cannot be detected immediately. If the request is not received, the bus module signals a bus interruption to the MPA. F9 flashes on the display. After the maximum time of approx. 60 s has expired, the function set in parameter P17 is applied.

Parameters			
Parameter description			
Parameters	**Designation**	**Description**	**Setting / Examples**
P18	**Input X17**	This parameter specifies the function according to which the input should behave.	Setting 0: No function assigned for this input. Setting 1: Function flame NC for the flame signal. The signals NO and NC must be inverted. When using this setting, the function "Flame NO" must also be selected, otherwise the configuration is incorrect. Setting 2: Function flame NO for the flame signal. Setting 3: Function min. gas pressure monitoring. Setting 4: Function POC V1 end contact signal for valve 1 Setting 5: Function POC V2 end contact signal for valve 2 Setting 6: Function start release on, for continuing the start-up process Note: Also available as a bus signal. Setting 7: Function V2 stepwise on, for switching on output X14 in operation. Note: Also available as a bus signal. Setting 8: Function main burner on, for switching the automatic gas burner control system to main burner operation. Note: Also available as a bus signal. Setting 9: Function LDW1, for monitoring an air pressure detector. Note: Also take setting P16 into account. Setting 10: Function heat request / temperature controller Setting 11: Function: Remote unlock Note: Also available as a bus signal. Setting 12: Function air purge (control on/off possible for output X14 in start-up and operation) Note: Also available as a bus signal. Setting 13: Function cooling (control on/off for output X8 = fan) Note: Also available as a bus signal. Setting 14: Function LDW2, for monitoring an air pressure detector, with the same functions as LDW1. Note: Also take setting P66 into account. Setting 15: Function gas pressure detector for monitoring the maximum gas pressure (GDWmax)

Parameters			
Parameter description			
Parameters	**Designation**	**Description**	**Setting / Examples**
P19	**Configuration of output for operation**	The output can be switched to specific states using the following parameter settings. "ON" means 115 V AC or 230 V AC; all other states are "OFF" (i.e. 0 V).	Setting 0: "Wait": Output is on in state 2 (Wait for heat request). Setting 1: "Stable": Output is on in the states 18 (Pilot mode), 22 (Operation) and 23 (Pause 4). Setting 2: "Main flame on" output is on in the states 21 (Flame B stabilisation) to state 23 (Pause 4). Setting 3: "Flame on": Output is on from state 16 (Flame A stabilisation) to state 24 (Pause 4). Setting 4: "Follow on": Output is on from state 16 (Flame A stabilisation) to state 23 (Pause 4). If the states are exited, the output remains on for a further 15 minutes. This information for the follow-on is retained after a restart attempt of the automatic gas burner control system, but not if the mains power is switched off and on again. The output is also switched on for one minute after 24 hours (e.g. to prevent the pump from blocking). Note: If a restart is performed within 24 hours, the counter for the blocking prevention function also restarts. Setting 5: "Safety time 1": Output is on in state 13 (Pre-ignition) and state 14 (Ignition). Setting 6: "Aeration": Output is on in state 10 (pre-aeration) and state 26 (post-aeration). Setting 7: Reserved. Setting 8: "Bus-dependent": Switching of the output via bus signal. Setting 9: "Valve for greasing function during ignition" Setting 10: "Pilot burner stable": Output on in pilot mode. Setting 11: "Main burner stable": Output on in main burner mode.
P20	**Safety chain open duration**	This parameter can be used to determine the duration of state 31 (Safety chain open). This is the time after which the automatic gas burner control system makes a restart attempt or switches immediately to a lock state, depending on the anti-oscillation counter and P15 (Locking with open safety chain).	Value range: 0 to 65 534 (resolution in 1/16 s). 65 535 = infinite

Parameters			
Parameter description			
Parameters	**Designation**	**Description**	**Setting / Examples**
P21	**Shutter test for flame detector device**	This parameter activates the shutter test of the flame detection device. Take note of the setting for parameters P33 (Active FLW phase 1) and P36 (Active FLW phase 2).	Example: If P33 = 1 and P36 = 1, no shutter flame test is carried out for FLW 2. The test is active only in states with "flame on" (states 12-19). Setting 0: Shutter flame test is inactive. Setting 1: Shutter flame test for flame detector device 1. Setting 2: Shutter flame test for flame detector device 2. Setting 3: Shutter flame test for flame detector device 1 and flame detector device 2 (expert setting). When using this setting, the test starts only once both flame signals report ON. It is ended successfully when both flame signals report OFF.
P22	**FM mode**	Immediate safety shut-off with subsequent malfunction interlock if there is a gas shortage or error on the limit switch in the gas valve.	Setting 0: Not active Setting 1: Non-volatile lock-out for gas shortage and error on limit switch V1 or V2, error on air pressure detector and error on gas pressure detector.
P23	**POC tolerance time**	Adjustable tolerance time until a safety shutdown is triggered if the limit switch is not activated. The prescribed maximum total closing time must be taken into account.	Value range: 16 to 48 (resolution in 1/16 s)
P24	**Wait Positioning**	For the states pre-ventilation position, ignition position and post-ventilation position, waiting for the extension module can be configured individually for each of the three states. What is waited for is defined in P248. P248>0: Wait for this set time, P248=0: Wait for end stops connected to the low and high fire inputs of the EM.	Setting via 3 bits: Bit0: Pre-purge position Bit1: Ignition position Bit2: Post-purge positionosition
P25	**Maximum waiting time until motor position is reached**	Maximum time until safety shutdown for the states "Pre-aeration position", "Ignition position" and "Post-aeration position". The end stop signals must be present within this time.	Value range: 0 to 1 920 (120 s) (resolution in 1/16 s)
P26	**Input X16**	Parameter setting for the function of input X16	For setting details, see P18 input X17
P27	**Input X18**	Parameter setting for the function of input X18	For setting details, see P18 input X17
P28	**Input X19**	Parameter setting for the function of input X19	For setting details, see P18 input X17
P29	**Input X20**	Parameter setting for the function of input X20	For setting details, see P18 input X17

Parameters			
Parameter description			
Parameters	**Designation**	**Description**	**Setting / Examples**
P30	**Pre-aeration duration**	This parameter can be used to determine the duration of state 10 (Pre-aeration). Attention: The parameter "Pre-aeration B" (P46) is also added to the state time.	Value range: 0 to 32 767 (resolution in 1/16 s)
P31	**Duration of pre-ignition time**	This parameter can be used to determine the duration of state 13 (Pre-ignition). During this time, ignition is already active and the gas valves are closed.	Value range: 0 to 1920 (resolution in 1/16 s)
P32	**Safety time for start-up / first safety time**	Defines the duration of the safety time for start-up. Maximum time from opening the gas valves to flame detection. NOTE: This duration is divided between the two states 14 and 15. The state 15 always lasts 0.5 seconds.	Value range: 16 to 960 (resolution in 1/16 s) **Attention**: In FM applications, the following times must not be exceeded. Burner with pilot flame: 10 s (Setting value max. 160) Burner with direct ignition: < 2 500 000 Btu/h ≤ 15 s (Setting value max. 240) > 2 500 000 Btu/h ≤ 10 s (Setting value max. 160)
P33	**Active flame detector device(s) for safety time for start-up**	This parameter controls which flame detector device(s) (state 15 to state 19) is/are active for flame detection. NOTE: If flame signal 2 is used, take into account the input settings P18, P26 to P29 (function: flame detector devices NO/NC for FLW 2).	Setting: 1: Only flame signal 1 is relevant 2: Only flame signal 2 is relevant 3: Flame 1 AND flame 2 4: Flame 1 OR flame 2
P34	**Stabilisation time A**	Duration of states 16 "Stabilisation of flame A"	Value range: 0 to 65 534 (resolution in 1/16 s)
P35	**Second safety time during start-up**	Duration of the second safety time. This setting is for the maximum time from the opening of gas valve V2 until flame detection in phase 2.	NOTE: This duration is divided between the two states 15 and 16. The state 16 always lasts 0.5 seconds. Value range: 16 to 480 (resolution in 1/16 s) **Attention**: In FM applications, the following times must not be exceeded. Burner with pilot flame: 10 s (Setting value max. 160) Burner with direct ignition: < 2 500 000 Btu/h ≤ 15 s (Setting value max. 240) > 2 500 000 Btu/h ≤ 10 s (Setting value max. 160)

Parameters			
Parameter description			
Parameters	**Designation**	**Description**	**Setting / Examples**
P36	**Active flame detector device(s) for phase 2**	The parameter controls which flame detector device(s) are active in phase 2 (state 21 "Flame B stabilisation" to state 23 "Pause 4") for flame detection. NOTE: If flame signal 2 is used, take into account the input settings P18, P26 to P29 (function: flame detector devices NO/NC for FLW 2).	Setting: 1: Only flame signal 1 is relevant 2: Only flame signal 2 is relevant 3: Flame 1 AND flame 2 4: Flame 1 OR flame 2
P37	**Stabilisation time B**	Defines the duration of the states 21 "Stabilisation of flame B" after the second safety time.	Value range: 0 to 65 534 (resolution in 1/16 s)
P38	**Operating mode V1 V2**	Defines the operating mode of the gas valves V1 and V2 during operation.	Setting 0: Uninterrupted start gas. V1 off, V2 on (pilot gas valve V1 off in second safety time) Setting 1: Continuous start gas. V1 and V2 on (pilot gas valve V1 remains on during main operation) Setting 2: Two-stage operation. V1 on, V2 on/off in operation (state 22 and 23), determined by input function or bus setpoint, see P64. Setting 3: Direct ignition. V1 and V2 both open for the first safety time; the second safety time is skipped in the state sequence. Setting 4: Direct ignition with signal V1. Output X14 is used for the air purge function, see input functions. The second safety time is skipped in the state sequence. Setting 5: Direct ignition with signal V1. Output X14 is used for the vent valve of the "greasing function". For this function, the output is on from state 9 (Pre-aeration position) to state 16 (Stabilisation A). The second safety time is skipped in the state sequence.
P39	**Maximum waiting time for start release**	This parameter determines the maximum duration of state 8 (Start release). During this time, the MPA waits for the start release from a hardware input or via the bus signal, depending on the configuration. If the time expires without the signal being received, the MPA performs a safety shutdown. Depending on the setting in parameter P12, a fault lock-out or another start-up attempt is then made. If no input signal is configured, this waiting time is skipped.	Value range: 1 to 65 534 (resolution in 1/16 s) 65 535 = infinite

Parameters			
Parameter description			
Parameters	**Designation**	**Description**	**Setting / Examples**
P40	**Duration of normal operation**	If the MPA is in operation, it switches to state 2 after this time expires and performs a new start-up. During intermittent operation, a self test is required during start-up at least every 24 hours. If a heat request is present before reaching the 24-hour threshold, the system restarts automatically. NOTE (if continuous operation is not set): The stabilisation times A (P34) and B (P37) count towards the operating time. These times > 1 min are therefore deducted from the duration of normal operation. If the total stabilisation times are longer than the duration of normal operation, the duration of normal operation is set to 0 and the MPA switches off immediately when operation commences.	Value range 1 to 65 534: Time until a restart (resolution in minutes) 65 535: Continuous operation 1 439: Intermittent operation
P41	**Safety time operation FLW 1**	Defines the duration of the safety time for the MPA 41xx during operation for FLW 1. Time until the gas valves close in the case of flame failure.	Value range: 12 to 48 (resolution in 1/16 s) **Attention:** The total response time to flame failure during operation consists of P41 plus any possible response times of external flame detector devices, see the "Flame detector device" annex.
P42	**Safety time operation FLW 2**	Defines the duration of the safety time during operation for FLW 2. Maximum time until the gas valves close in the case of flame failure.	Value range: 7 to 48 (resolution in 1/16 s) **Attention:** The total response time to flame failure during operation consists of P42 plus any possible response times of external flame detector devices, see the "Flame detector device" annex.
P43	**Duration for new start of pilot burner**	If the "Main burner on" signal is lost, the system switches back to pilot operation. This parameter determines the duration for which V1 opens again before the system switches back to flame detection / ignition (see P45) in the state sequence.	Value range: 8 to 960 (resolution in 1/16 s)

Parameters			
Parameter description			
Parameters	**Designation**	**Description**	**Setting / Examples**
P44	**Minimum duration of normal operation**	For both operating states, the heat request signal is maintained following a loss of the external heat request until the time set in this parameter has expired. Attention: If a time is configured, the stabilisation time triggered by a loss of the heat request can no longer be interrupted. **Attention:** If the time in the "Duration of normal operation" parameter (P40) expires, operation is ceased anyway.	Value range: 0 to 960 (resolution in 1/16 s)
P45	**Ignition on for pilot restart**	After the "Restart pilot burner" state, this parameter determines whether the system switches to ignition (state 14) or directly to flame detection.	Value range: 0: Directly to flame detection 1: To ignition
P46	**Duration of pre-aeration B**	This parameter determines the duration of state 10 (Pre-aeration). **Attention:** The parameter "Pre-aeration" (P30) is also added to the state time.	Value range: 0 to 32 767 (resolution in 1/16 s)
P47	**Idle state control for start release**	At the commencement of the start release (state 8), a check can be performed for an idle state of the input signal for the start release function. If an active signal is detected, the MPA performs a safety shutdown. Depending on the setting in parameter P12, a fault interlock or another start-up attempt is then made	Value range: 0: No check of input function 1: Idle state control on input signal for start release.
P48	**Ionisation threshold**	An ionisation current above 1.2 µA is registered as a flame. This parameter can be used to increase the switching threshold for ionisation flame detection (FLW 1). The threshold applies to external light detection, start-up and operation. Information: The measuring tolerance is ±0.5 µA	Value range: 12 to 60 (resolution in 0.1 µA)
P49	**Operating release control**	The parameter enables monitoring of the start enable input signal up to the operating state. If the signal is lost, a safety shutdown occurs. Depending on the setting in parameter P12, a fault interlock or another start-up attempt is then made.	Value range: 0: Check inactive 1: Check active

Parameters			
Parameter description			
Parameters	**Designation**	**Description**	**Setting / Examples**
P50	**Follow-up time**	Defines the follow-up time (state 27), although the time measurement already starts during post-aeration (state 26). That is, if the follow-up time is less than or equal to the post-aeration time, the "Follow-up time" state is skipped.	Value range: 16 to 65 534 (resolution in 1/16 s)
P51	**Post-purge time**	Defines the duration of the post-aeration time (state 26).	Value range: 0 to 65 534 (resolution in 1/16 s)
P52	**Restart protection**	Defines the duration of the restart protection (state 22).	Value range: 0 to 65 534 (resolution in 1/16 s)
Note about P50, P51 and P52	**Post-aeration (P51) can be interrupted by a new heat request if the restart protection (P52) has been set to 0 and the follow-up time (P50) has already expired.**		
P60	**Network address 2**	**Setting of Profinet address**	Value range: 0 to 255
P61	**Network address 1**	Setting of Profinet address	Value range: 0 to 255
P62	**Network address 0**	Setting of Profinet address Note: The last part of the address is located in P11 (Fieldbus address)	Value range: 0 to 255
P63	**Behaviour for air pressure error, external cooling/pre-rinsing**	If the LDW is also required to monitor the cooling airflow, this parameter is used to specify the behaviour if the air pressure is lost. If an error occurs, the "Error info air pressure cooling" bit is set for the status.	Setting 0: No response Setting 1: Only error message in error memory Setting 2: Safety shutdown with restart
P64	**Selection of HW or bus inputs**	This parameter specifies the type of input signals. Selection between HW input or Fieldbus signal.	Setting using 5 bits: Bit0: Main burner on Bit1: V2 stepwise on Bit2: Air purge (for X14) on Bit3: Cooling (for X8) on Bit4: Start release The following applies for the functions: 0 = HW input or input function not configured, 1 = input function via Fieldbus.
P65	**Behaviour when waiting for air purge / cooling**	This parameter defines the priority between cooling and heat requests.	Value range: 0: Heat request takes priority 1: Cooling request takes priority
P66	**Operating mode for air pressure detector 2**	Air pressure monitoring can be activated during start-up (states 6 to 13) and/or during operation (states 16 to 18 and 21 to 23) and/or during post-purge (states 25+26) as well as during cooling in standby (states 27...30 and 0...2). The same applies to the standby control (state 3).	The functions LDW1 and LDW2 offer the same setting options. Value range: Monitoring during: Bit0: Idle state control Bit1: Pilot burner mode Bit2: Main burner mode Bit3: Startup Bit4: Post-aeration Bit5: Standby during cooling Bit6: Only pre-aeration Bit7: Only post-aerat
P100-P103	**Customer-specific: OEM 0-3**	Reserved	Value range: 0 to 65 535

Parameters			
Parameter description			
Parameters	**Designation**	**Description**	**Setting / Examples**
P104	**Customer-specific: OEM 4 with built-in expansion module EM2/4, EM2/5 or EM2/6 => compatibility mode for V1.1 bus communication (see parameter EM x/y)**	Reserved	**Value range: 0 bis 65535**
P105-P109	**Customer-specific: Operator 0-4**	Reserved	**Value range: 0 to 65 535**
P239	**Extension module**	Configuration of whether an extension module is installed	Value range: 0: No EM installed 1: EM installed

Parameters							
Factory settings							
Para-meters	Designation	Factory setting	Unit	Convenience parameter settings	Min. value	Max. value	Access level
P10	Release parameter settings	OFF			0	1	OEM
P11	Fieldbus address configuration	255		x	0	255	Operator
P12	Number of restart attempts or anti-oscillation counter	0			0	5	OEM
P13	Number of restart attempts when flame is missing after the safety time for start-up	0		x	0	2	OEM
P14	Number of restart attempts after flame lift-off or missing flame after the second safety time for start-up	0		x	0	1	OEM
P15	Locking with open safety chain	ON		x	0	1	OEM
P16	Operating mode for air pressure detector	0		x	0	63	OEM
P17	Temperature controller: Operating mode	0			0	4	Service
P18	Input X17	0		x	0	15	OEM
P19	Configuration of output for operating mode	3		x	0	11	Service
P20	Safety chain open duration	960	1/16 s		0	65 535	OEM
P21	Shutter test for flame detector device	0		x	0	3	OEM
P22	FM mode	OFF			0	1	OEM
P23	POC tolerance time	16	1/16 s		16	48	OEM
P24	Motor end stop monitoring	0			0	7	OEM
P25	Maximum waiting time until motor position is reached	480	1/16 s		0	1 920	OEM
P26	Input X16	0			0	15	OEM
P27	Input X18	0			0	15	OEM

Parameters							
Factory settings							
Para-meters	Designation	Factory setting	Unit	Convenience parameter settings	Min. value	Max. value	Access level
P28	Input X19	10			0	15	OEM
P29	Input X20	11			0	15	OEM
P30	Pre-aeration duration	0	1/16 s	x	0	32 767	Service
P31	Duration of pre-ignition time	16	1/16 s	x	0	65 534	OEM
P32	Safety time for start-up / first safety time	48	1/16 s	x	16	960	OEM
P33	Active flame detector device(s) for safety time for start-up	1		x	1	4	OEM
P34	Stabilisation time A	16	1/16 s		0	65 534	OEM
P35	Second safety time during start-up	16	1/16 s	x	16	480	OEM
P36	Active flame detector device(s) for phase 2	1		x	1	4	OEM
P37	Stabilisation time B	16	1/16 s		0	65 534	OEM
P38	Operating mode V1 V2	1		x	0	5	OEM
P39	Maximum waiting time for start release	2 400	1/16 s		0	65 535	OEM
P40	Duration of normal operation	1 439	min	x	0	65 535	OEM
P41	Safety time operation FLW 1	16	1/16 s	x	12	48	OEM
P42	Safety time operation FLW 2	16	1/16 s	x	4	48	OEM
P43	Duration for new start of pilot burner	16	1/16 s		8	960	OEM
P44	Minimum duration of normal operation	0	1/16 s		0	960	OEM
P45	Ignition on for pilot restart	0			0	1	OEM
P46	Duration of pre-aeration B	0	1/16 s	x	0	32 767	OEM
P47	Idle state control for start release	0			0	1	OEM
P48	Ionisation threshold	12			12	60	OEM
P49	Operating release control	1			0	1	OEM
P50	Follow-up time	80	1/16 s	x	16	160	Service
P51	Post-purge time	0	1/16 s	x	0	65 534	Service

Parameters							
Factory settings							
Para-meters	Designation	Factory setting	Unit	Convenience parameter settings	Min. value	Max. value	Access level
P52	Restart protection	0	1/16 s	x	0	65 534	Service
P60	Network address 2	192			0	255	Operator
P61	Network address 1	168			0	255	Operator
P62	Network address 0	0			0	255	Operator
P63	Behavior for air pressure error, external cooling	0			0	2	OEM
P64	Selection of HW or bus inputs	0			0	31	OEM
P65	Behavior when waiting for air purge / cooling	0			0	1	OEM
P66	LDW 2: Operating mode	0			0	63	OEM
P100-P104	Customer-specific: OEM	0			0	65 535	OEM
P105-P109	Customer-specific: Operator	0			0	65 535	OEM
P239	Extension module	0			0	1	OEM

Status information			
MPA 41xx			
Designation	**Description**	**Displayed using VisionBox**	**Displayed using Display**
General information			
Non-volatile lock-out	Automatic gas burner control system is locked	●	LED
State number	Current state of the automatic gas burner control system, button combination + and -	●	7Seg
Current access level		●	
Flame	Flame detected	●	LED
Manual operation	Automatic gas burner control system in manual mode	●	7Seg
Flame quality	Value > 49 good flame (for ionisation)	●	Info
Temperature controller (hardware + parameter / bus)	Combined heat request from hardware signal and bus signal.	●	
Fieldbus connection present	Fieldbus connection established	●	7Seg
Heat request	Signal combination from bus setpoint and HW input	●	LED
Error information for air pressure for cooling		●	
Temperature of automatic gas burner control system	Internal temperature of MPA	●	Info
Warning of high internal temperature	High internal temperature of MPA	●	
Inputs			
LDW 1	Signal from HW input LDW1	●	
LDW 2	Signal from HW input LDW2	●	
Flame 1	Signal from Flame1 input, ionisation X5	●	
Flame 2 NO	Signal from HW input for Flame2 NO	●	
Flame 2 NC	Signal from HW input for Flame2 NC	●	
Remote unlocking	Signal from HW input for remote unlocking	●	
Gas pressure detector	Signal from HW input for gas pressure detector min	●	
Temperature controller input (hardware input)	Signal from HW input for temperature controller / heat request	●	
Main burner on	Signal from HW input for main burner on	●	
Cooling (for X8) on	Signal from HW input for cooling (for X8) on	●	
Air purge	Signal from HW input for air purge (for X14) on	●	
POC V1	Signal from HW input POC V1	●	
POC V2	Signal from HW input POC V2	●	
Start release	Signal from HW input for start release	●	
V2 stepwise on	Signal from HW input V2 stepwise on	●	
Outputs			
Valve 1	Signal for output X13	●	
Valve 2	Signal for output X14	●	
Ignition	Signal for output X15	●	
Fan	Signal for output X8	●	
Operation	Signal for output X11	●	

Status information			
MPA 41xx			
Designation	**Description**	**Displayed using VisionBox**	**Displayed using Display**
Counter			
Time counter / lifetime counter	Time since the automatic gas burner control system was switched on	●	
Runtime meter	Fixed operating hours	●	
Runtime meter resettable	Can be reset using VisionBox and display	●	Info
Start counter	Fixed start counter	●	
Resettable start counter	Can be reset using VisionBox and display	●	Info
Switching cycles counter V2		●	Info
Runtime meter V2		●	
Switching cycles counter V2		●	Info
Switching cycles counter for fan / air valve		●	
Extension module		●	
EM analogue output		●	
EM input high		●	
EM input low		●	
EM input minus		●	
EM input plus		●	
Internal information			
Version index P1			Info
Version index P2			Info
Version index PEM			Info
State timer in minutes	Displayed state timer runs in minutes, otherwise in 1/16 sec.	●	
Initialisation phase	Automatic gas burner control system is being initialised	●	
Multi-function switch	Is "ON" when the unlock button is pressed	●	
Procedure for access level change	CCC or value flashes on the display, ↵ button expected	●	7Seg
Safety shutdown	Restart attempt	●	
Error index	Internal error counter	●	
Remaining state time	Set to 65 535 if the remaining time is unlimited	●	
Cycl. state frame counter	Counts in a 1/128 s cycle	●	
Processor load		●	
Nominal modulation degree	No function	●	
Actual modulation degree	No function	●	

LED: Indicated by one of the 3 LEDs on the display
7Seg: Indicated by one or more characters on the 7-segment display
Info: Shown in information display mode

MPA 4114
Version without display
The MPA 4114 version has an integrated RESET button and two LEDs that indicate the device status. The M8 socket in the display area can be used to connect an external AM 41 display that provides the same functions as the display on the versions MPA 4112 and 4122.

Display unit

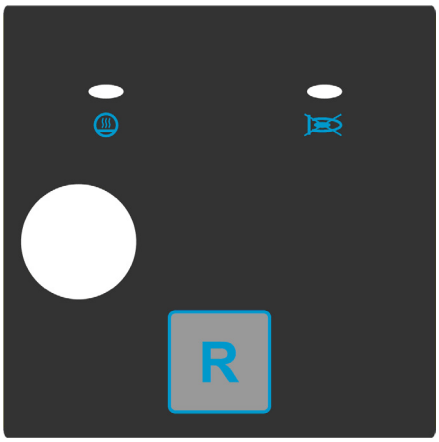

Yellow LED
- Display of operating state

Red LED
- Display of a fault
- Flashing signal for error code
- Display of pause status during configuration

RESET button
- Unlocking
- Enhanced unlock
- Confirmation of access level change

Yellow LED information

LED off:
Fault (state 0)

LED permanently on:
Waiting for heat request (state 2) until second safety time for flame detection (state 17), and from the states post-aeration (20) to pause 5 (23).

Flashing LED (0.5 Hz):
Operating display
(state 18 and state 19).

LED flashing rapidly (2 Hz):
Waiting for gas pressure if gas is missing (state 24) and safety chain open (state 25).

Red LED information

Fault
The most important error codes are displayed using different flashing patterns
The remaining error codes are displayed using a permanently on LED.

Information conveyed by both LEDs:
Password entry expected
Both LEDs flash alternately

MPA 4114 in parameter mode
After a password has been entered, both LEDs flash simultaneously.
Parameters can be changed.

Flashing patterns for error codes
MPA 4114

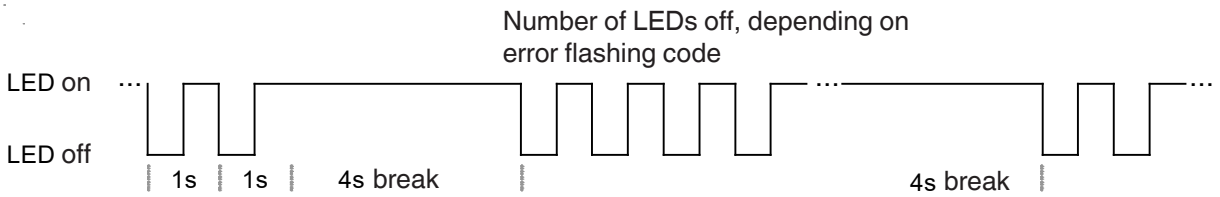

Flashing code MinDisp	Error ID	Error designation Refer to the above tables for more information about individual errors
1	F A2	ERROR_SAFETY_CHAIN_OPEN
2	F 60	ERROR_PARAMETER_CHANGE_NOT_RELEASED
3	F A7	ERROR_NO_FLAME_DURING_FIRST_SAFETY_TIME
3	F BC	ERROR_NO_FLAME_DURING_SECOND_SAFETY_TIME
3	F A9	ERROR_FLAME_GONE_OUT_DURING_STABILISATION
4	F A8	ERROR_FLAME_GONE_OUT_DURING_OPERATION
5	F AA	ERROR_IDLE_STATE_CONTROL_LDW
5	F AB	ERROR_NO_AIR_PRESSURE
6	F A6	ERROR_EXTERNAL_LIGHT
7	F 18	ERROR_EXTERNAL_APPLICATION
8	F 16	ERROR_TWI_COMMUNICATION_AND_LOW_VOLTAGE

Parameter settings

To change parameters, set the switch in the connection chamber to "Para" and supply the automatic gas burner control system with power; both LEDs flash alternately.
Enter the password and confirm it by pressing the RESET button. Both LEDs flash simultaneously.
The parameters can now be changed. In parameter mode, the MPA stops in pause states. Press the RESET button to continue to the next state (see state description).

Attention
The changed parameters are applied after pause 5 (state 29).
The flashing frequency of the LED indicates the pause state and shows that the RESET button must be pressed.

Example:
The system has reached the state "Pause 4". The red LED flashes 4 times and then switches off for 4 seconds.

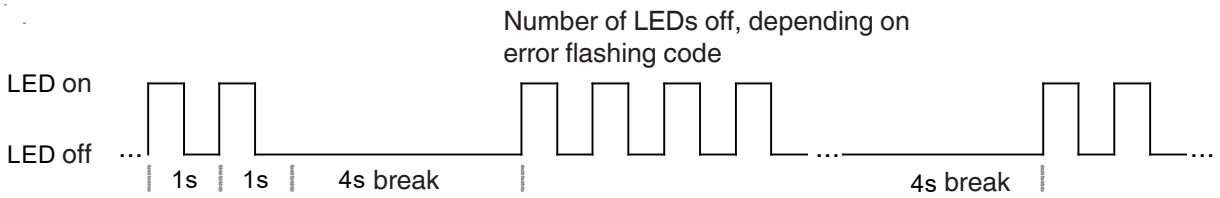

Information conveyed by both LEDs

When the power is turned on, both LEDs illuminate twice to check that they are functioning correctly.

Both LED flash (1 Hz) if a button press is required to change a level or if the automatic gas burner control system is ready for enhanced unlocking (pressing a button for between 5 and 10 s).

Both LEDs flash alternately if the automatic gas burner control system is started in parameter mode and the password for changing the parameters has not yet been entered (using VisionBox on the PC). The RESET button (and therefore manual mode) is locked.

MPA 4112, MPA 4122, display AM41
Display function
The integrated display or an external display can be used to set all parameters of the MPA.
Passwords are used to regulate access rights.

The display can show different information depending on the operating status of the automatic burner control system.

The device parameters can also be set using the VisionBox.



Display 3 x 7 segment

LED:
Blue: heat request
Yellow: flame quality
(flashes if the flame quality is poor)
Red: fault



Release button
RESET function and confirmation of input



Back



Plus
Increase the indicated value



Minus
Reduce the indicated value

Overview of the display modes
MPA 4112 / MPA 4122 / AM41

Mode	Active
Operating mode display	In normal operating conditions, if there is no fault.
Error display	If the unit is subject to a malfunction interlock.
Information display	From the operating display or error display by pressing the button combination  and
Error memory display	From the operating display or error display by pressing the button combination  and
Parameter display	From the operating display or error display by pressing the button combination 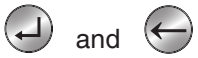 and
Reset display	From the operating display or error display by pressing the button combination 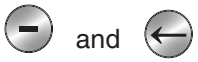 and
Flashing display	Depending on display mode: 1. Prompt to confirm the switch of access level 2. To intentionally reboot the MPA, press and hold the unlock button for more than 5 seconds (“Enhanced unlock”) 3. Processor 2 error, see error list 4. New password after password change 5. Unit restart, all segments and LEDs flash

MPA41x2 display	
►	**Display of operating state for parameter setting and troubleshooting**

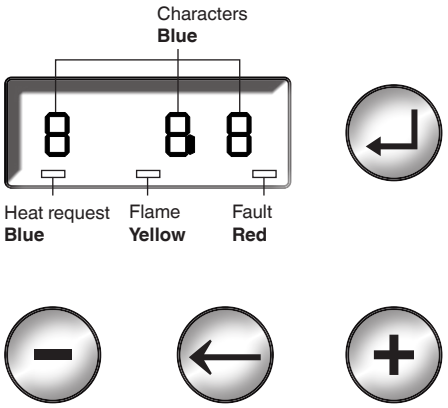

Attention
Note the appearance on a 7-segment display

1. Digits

6 = 6

8 = 8

0 = 0

2. Letters

B or b = b

D or d = d

O or o = o

Operating display MPA 41x2

► **Indicates the operating state of the automatic gas burner control system**

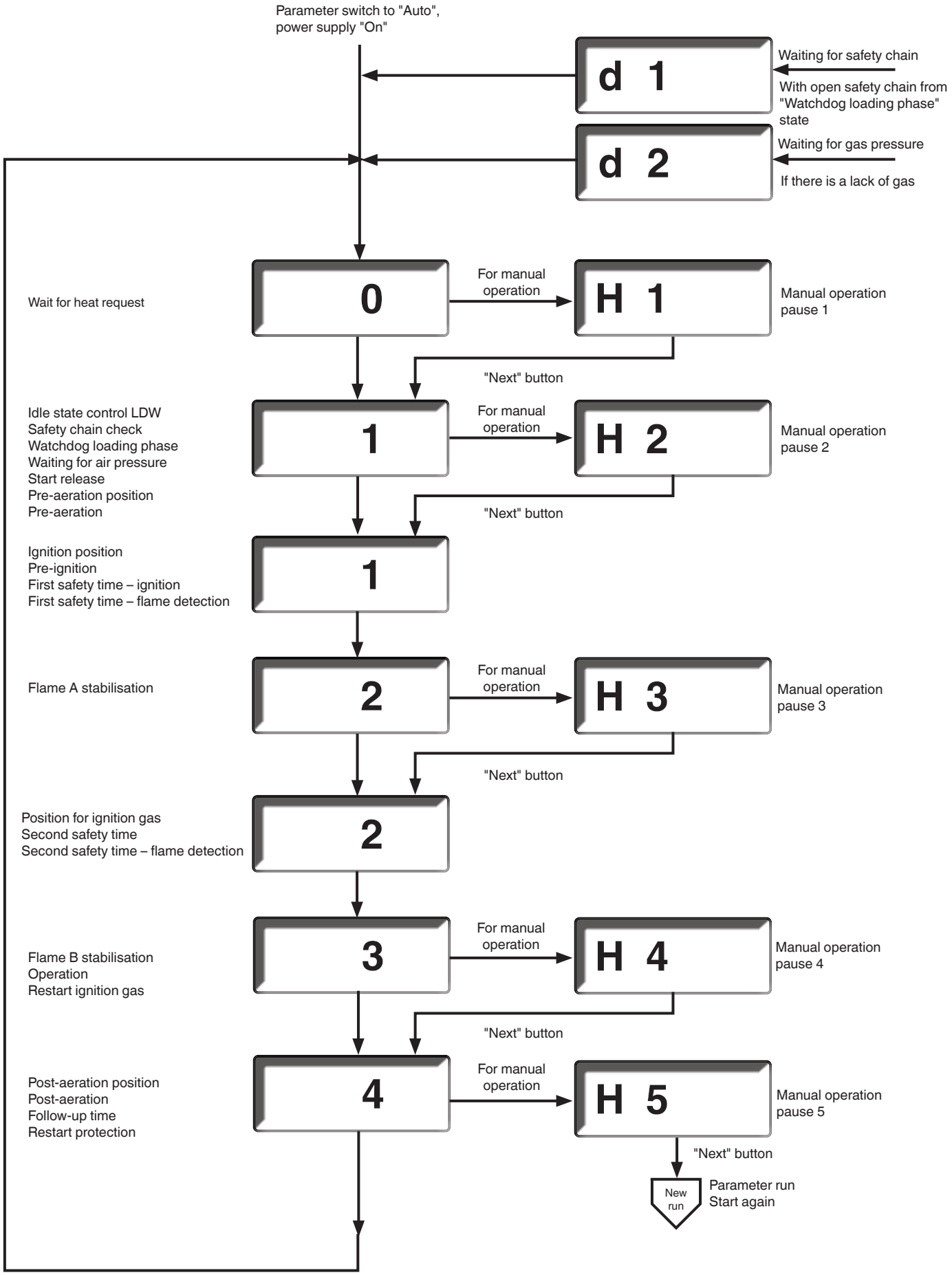

Operating display – additional information
► Display of state number
► Display and setting of the bus address

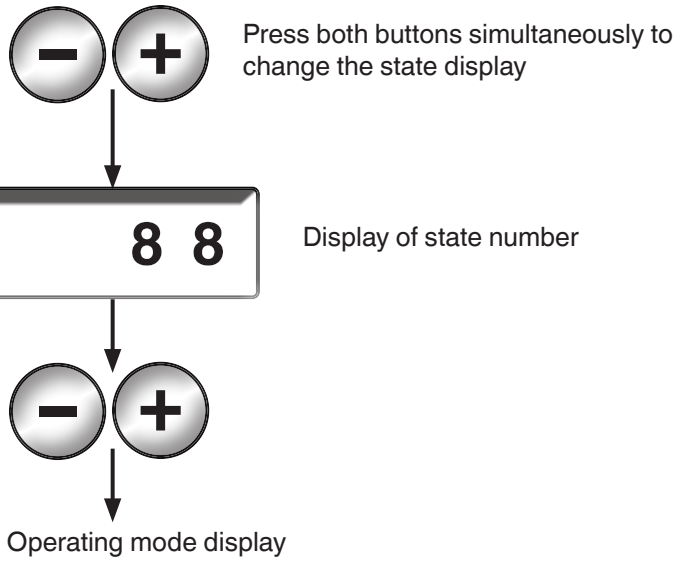

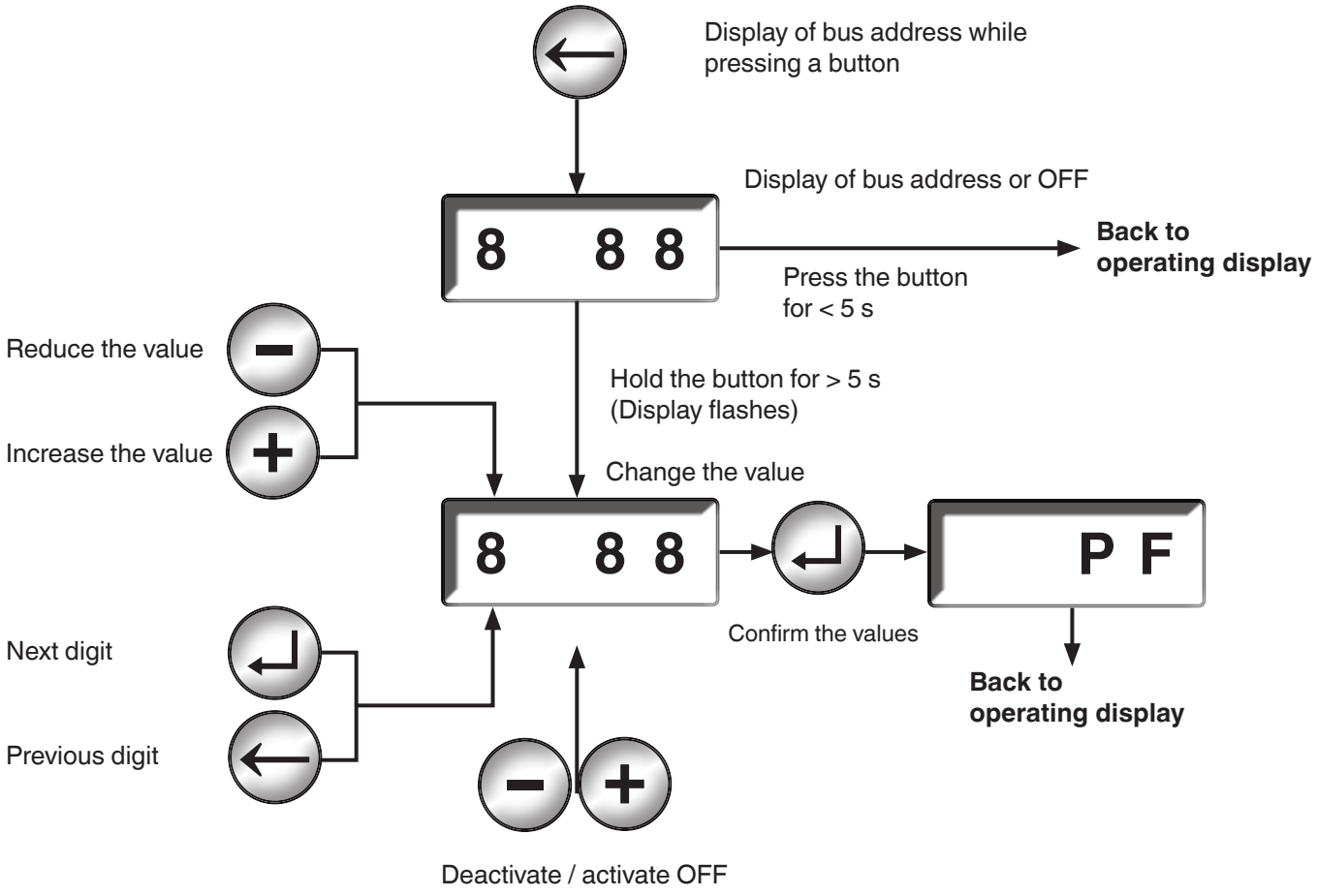

Information display	
►	**The information display is activated from the operating display or error display (not during automatic parameter setting).**
►	**The information display can be used to call up information about the flame quality, the resettable runtime meter, the resettable start counter, the switching cycles counter V2, the MPA internal temperature and the software indexes.**
►	**This mode is exited again after 60 seconds if no further buttons are pressed during this time.**

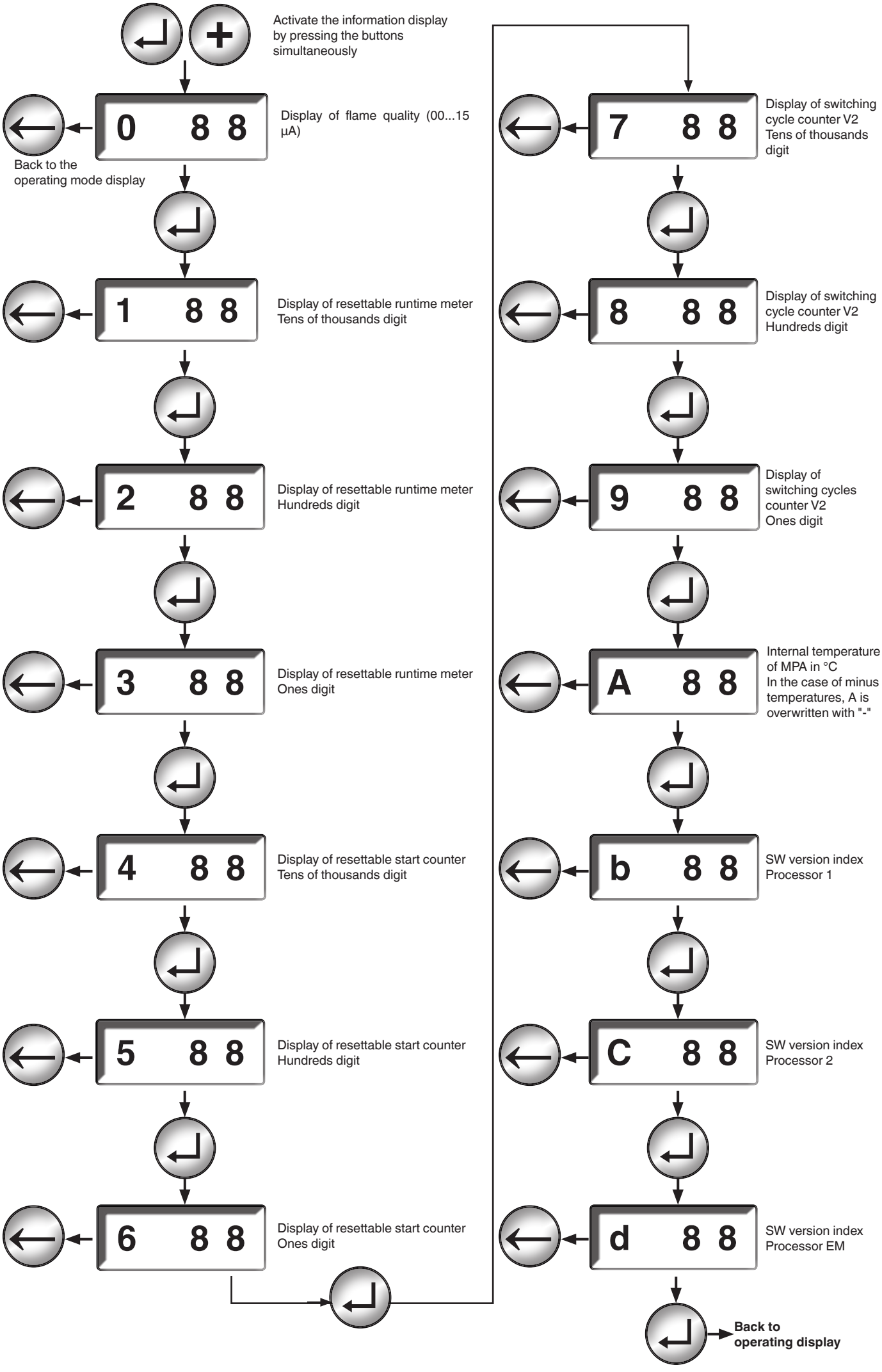
Activate the information display by pressing the buttons simultaneously
0 8 8
Display of flame quality (00...15 µA)
Back to the operating mode display
1 8 8
Display of resettable runtime meter Tens of thousands digit
2 8 8
Display of resettable runtime meter Hundreds digit
3 8 8
Display of resettable runtime meter Ones digit
4 8 8
Display of resettable start counter Tens of thousands digit
5 8 8
Display of resettable start counter Hundreds digit
6 8 8
Display of resettable start counter Ones digit
7 8 8
Display of switching cycle counter V2 Tens of thousands digit
8 8 8
Display of switching cycle counter V2 Hundreds digit
9 8 8
Display of switching cycles counter V2 Ones digit
A 8 8
Internal temperature of MPA in °C In the case of minus temperatures, A is overwritten with "-"
b 8 8
SW version index Processor 1
C 8 8
SW version index Processor 2
d 8 8
SW version index Processor EM
Back to operating display

Error display	
►	**The error display is activated automatically if the automatic gas burner control system enters a fault state.**
►	**The most recent error is displayed.**

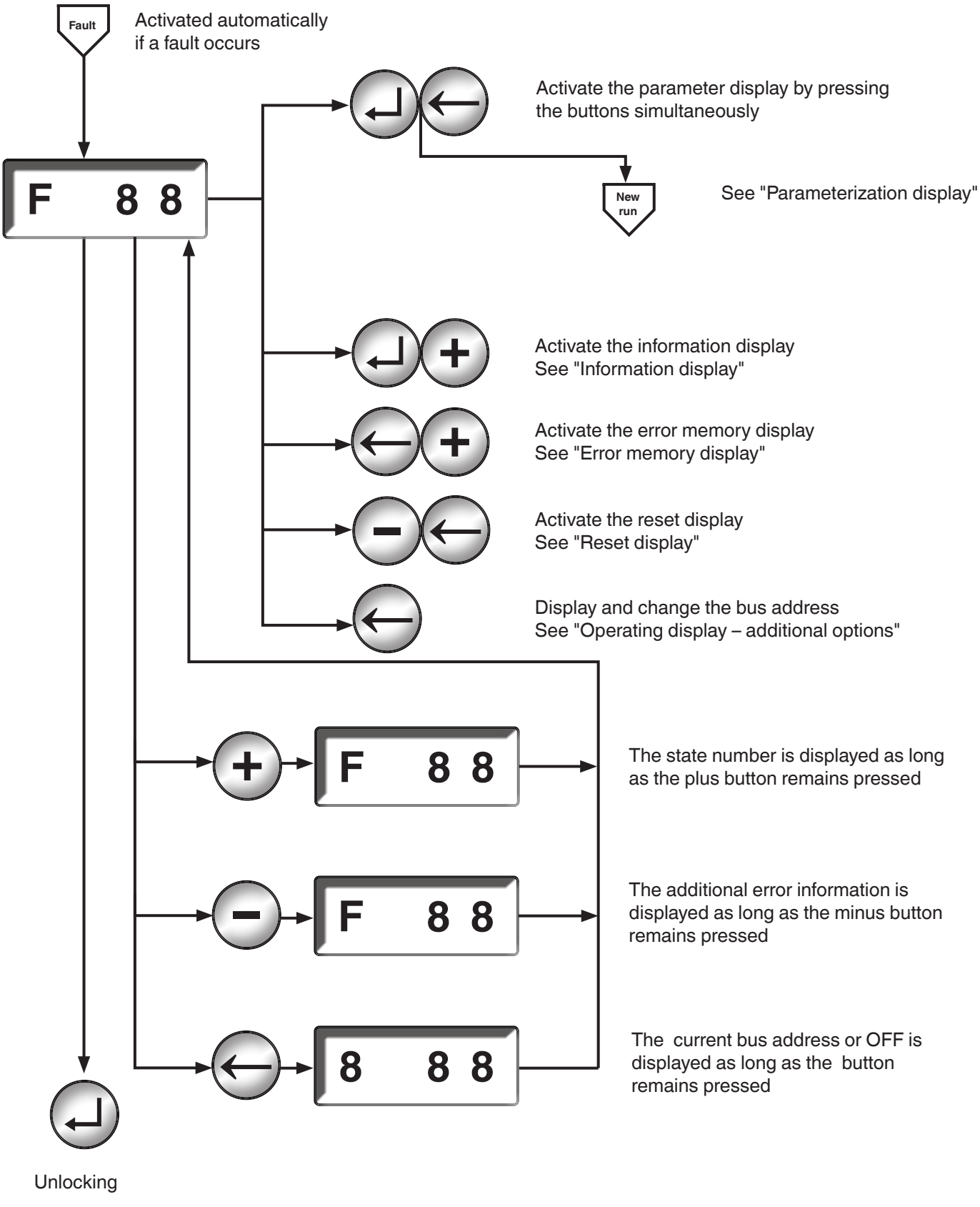

Error memory display	
►	The error memory display is used to call up the last 10 errors.
►	The first error displayed is the one that occurred most recently.
►	The error display is activated from the operating display (not during the display of parameters).
►	The error is shown on the two-digit seven-segment display.
►	The error memory display is exited again after 60 seconds if no further keys are pressed during this time.
►	If no error is yet saved in the error position, the display shows "--".

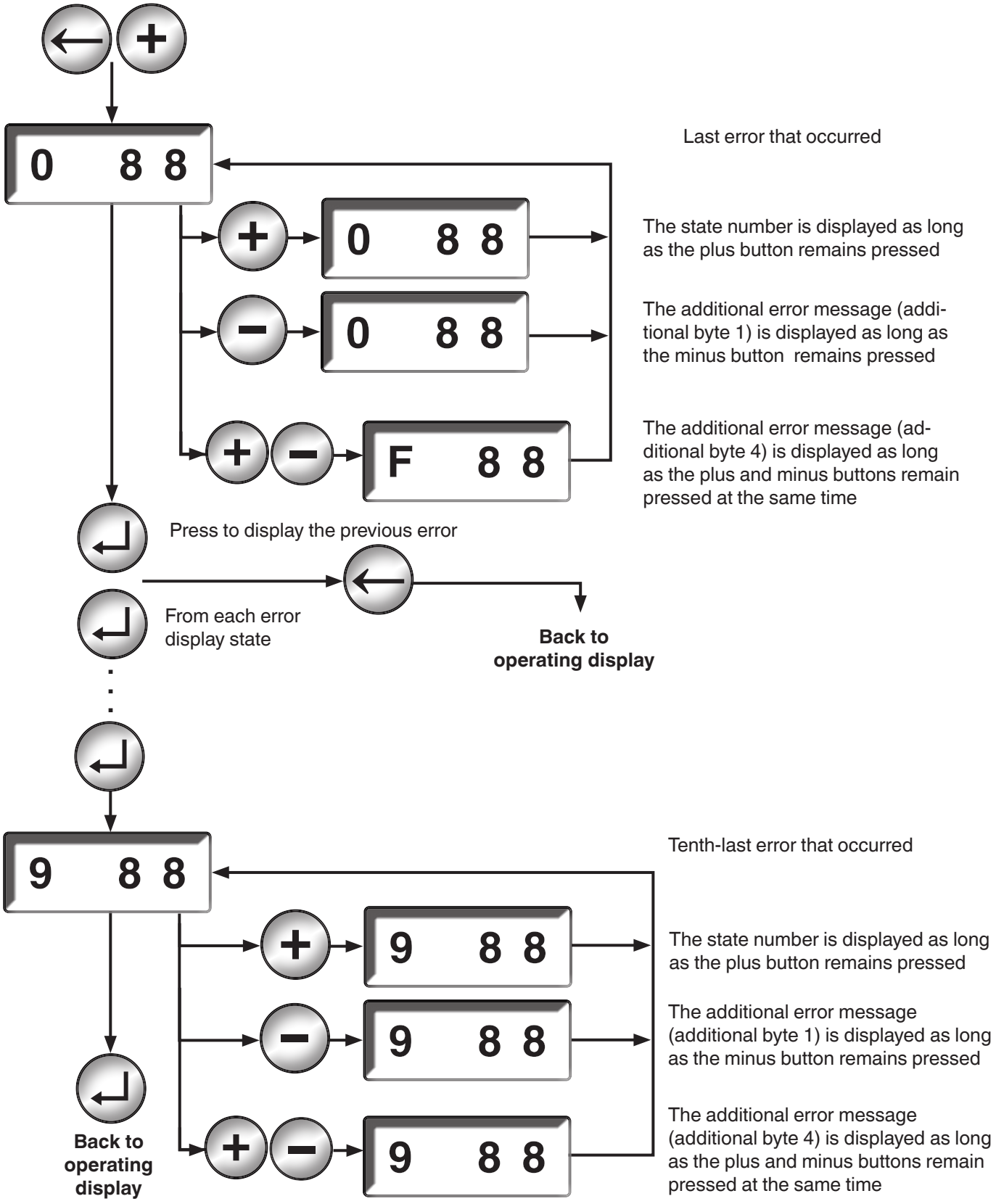

Parameter display	
►	**Once automatic parameter setting has been activated, the following parameter values must be set; see the parameter list.**
►	**The parameter setting display is not exited after a timeout period. If no buttons are pressed for 30 minutes, the system switches off and a malfunction interlock occurs.**
►	**A password is required to change the parameters.**
►	**Attention: Some parameter values are displayed here using a different resolution to the parameter mode when using the VisionBox. If it is not possible to display the parameter value at this resolution, "--" is shown on the display. The value can, however, still be changed using the resolution shown.**
►	**Service or OEM parameters can be changed only by entering the corresponding password or a higher-level password (e.g. the OEM password can also be used to change all service parameters).**

Display Number	Parameters	Value range	Unit
0	P30 – Pre-aeration time	0-99	1 s
1	P31 – Duration of pre-ignition	0-99	1 s
2	P32 – First safety time for start-up	1-60	1 s
3	P33 – Active flame monitoring phase 1	1-4	
4	P35 – Second safety time during start-up	1-30	1 s
5	P36 – Active flame monitoring phase 2	1-4	
6	P41 – Operation safety time for flame detector device 1	06-30 (= 0.6-3 s)	0.1 s [*1]
7	P42 – Operation safety time for flame detector device 2	05-30 (= 0.5-3 s)	0.1 s [*1]
8	P51 – Post-aeration time	0-99	1 s
9	P14 – Number of permitted restarts after flame lift-off during operation	0-5	
A	P13 – Number of permitted restarts after missing flame	0-5	
b	P15 – Locking after opening the safety chain	0 = off / 1 = on	
C	P16 – Operating mode of the air pressure detector	0-15	
d	P38 – Operating mode V1 V2	0-2	
E	P18 – Flame detector 2 NC monitoring / Gas pressure switch / POC	0-4	
F	P40 – Continuous operation (no shutdown after 24 h)	0 = off / 1 = on	
h [*3]	P21 – Shutter test for flame detector	0-3	
L	P19 – Output operating mode "Operation"	0-4	
o	P52 – Duration of restart protection	0-99	1 s
n [*2]	P11 – Fieldbus address	0-99 / oF [*2]	
r	P239 – Extension module	0 = off / 1 = on	

[*1] Adjustable in steps:

05 = 0.5 s	8 / 16	(only possible for FLW 2, smallest possible adjustment)
08 = 0.75 s	12 / 16	(only possible for FLW 1, smallest possible adjustment)
oP = 0.8125 s	13 / 16	(for FLW 41I with 0.19 s response time)
09 = 0.875 s	14 / 16	(for UV41 / UV42 with 0.125 s response time)
10 = 1 s	16 / 16	
15 = 1.5 s	24 / 16	
18 = 1.8125 s	29 / 16	(for FLW 41 I with 0.19 s response time)
19 = 1.875 s	30 / 16	(for UV41 / UV42 with 0.125 s response time)
20 = 2 s	32 / 16	
25 = 2.5 s	40 / 16	
28 = 2.8125 s	45 / 16	(for FLW 41 I with 0.19 s response time)
29 = 2.875 s	46 / 16	(for UV41 / UV42 with 0.125 s response time)
30 = 3 s	48 / 16	

[*2] The button combination - and + can be used to switch between OFF (display = oF) and the address. Addresses over 99 must be set using the VisionBox. Do not use the address "0".

[*3] The setting h is displayed only if continuous operation is active or was activated using the setting F.

Parameter display	
►	**Attention: The "Back" button can be used to return to previous steps in the program flow when working in parameter mode. Once the first input field is reached, the next press of the button returns to parameter mode.**

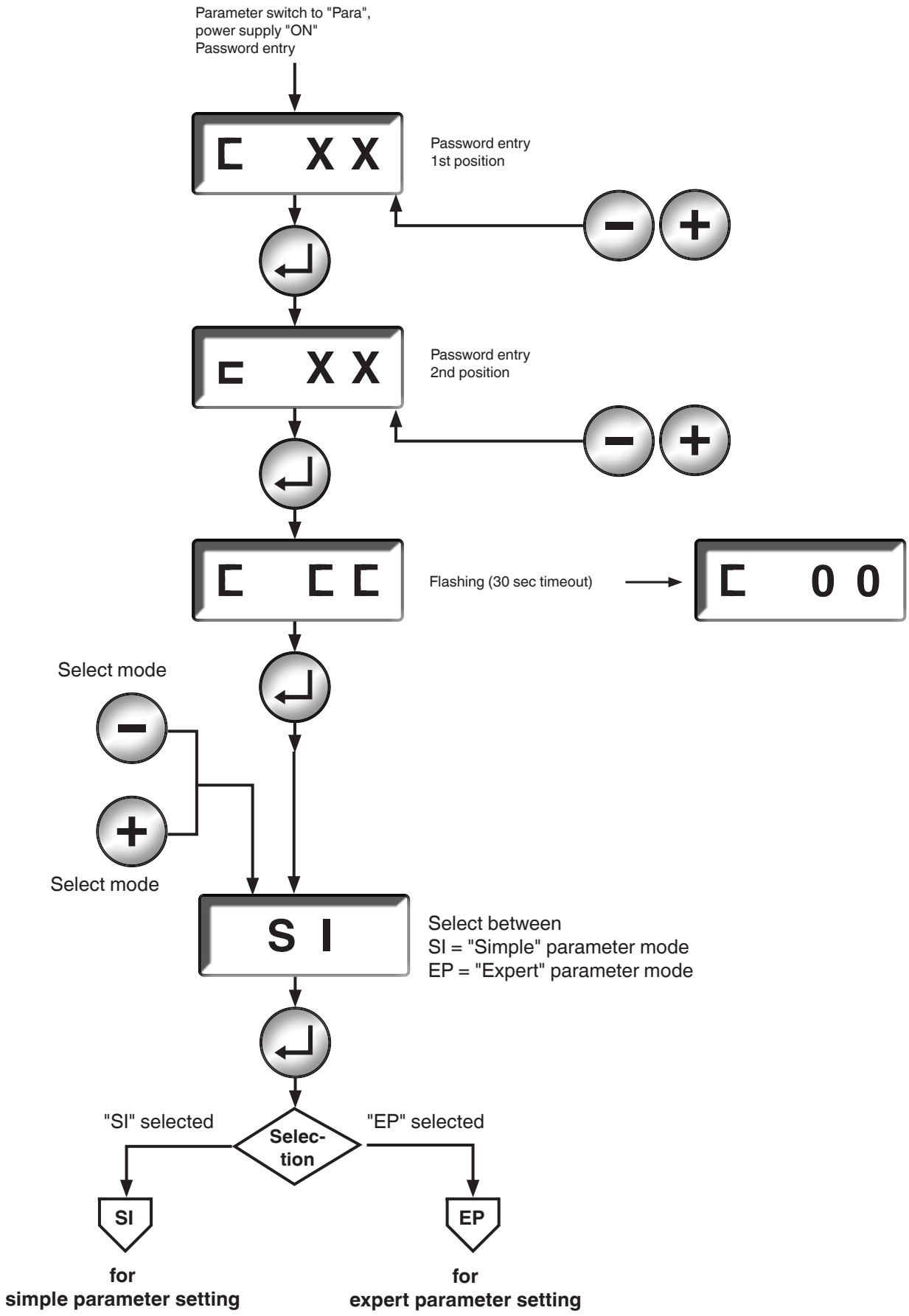

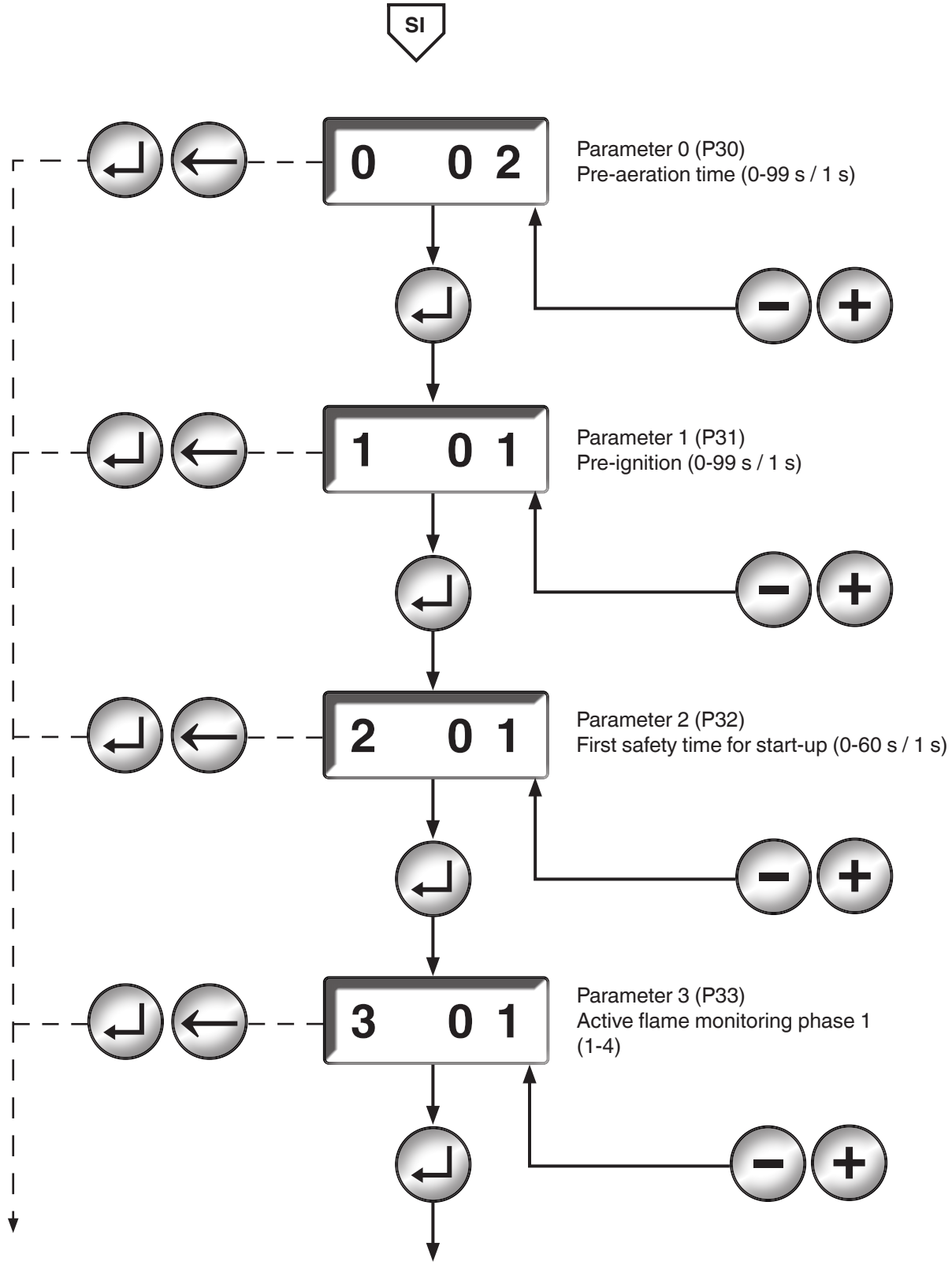
SI
0 0 2
Parameter 0 (P30)
Pre-aeration time (0-99 s / 1 s)
1 0 1
Parameter 1 (P31)
Pre-ignition (0-99 s / 1 s)
2 0 1
Parameter 2 (P32)
First safety time for start-up (0-60 s / 1 s)
3 0 1
Parameter 3 (P33)
Active flame monitoring phase 1
(1-4)

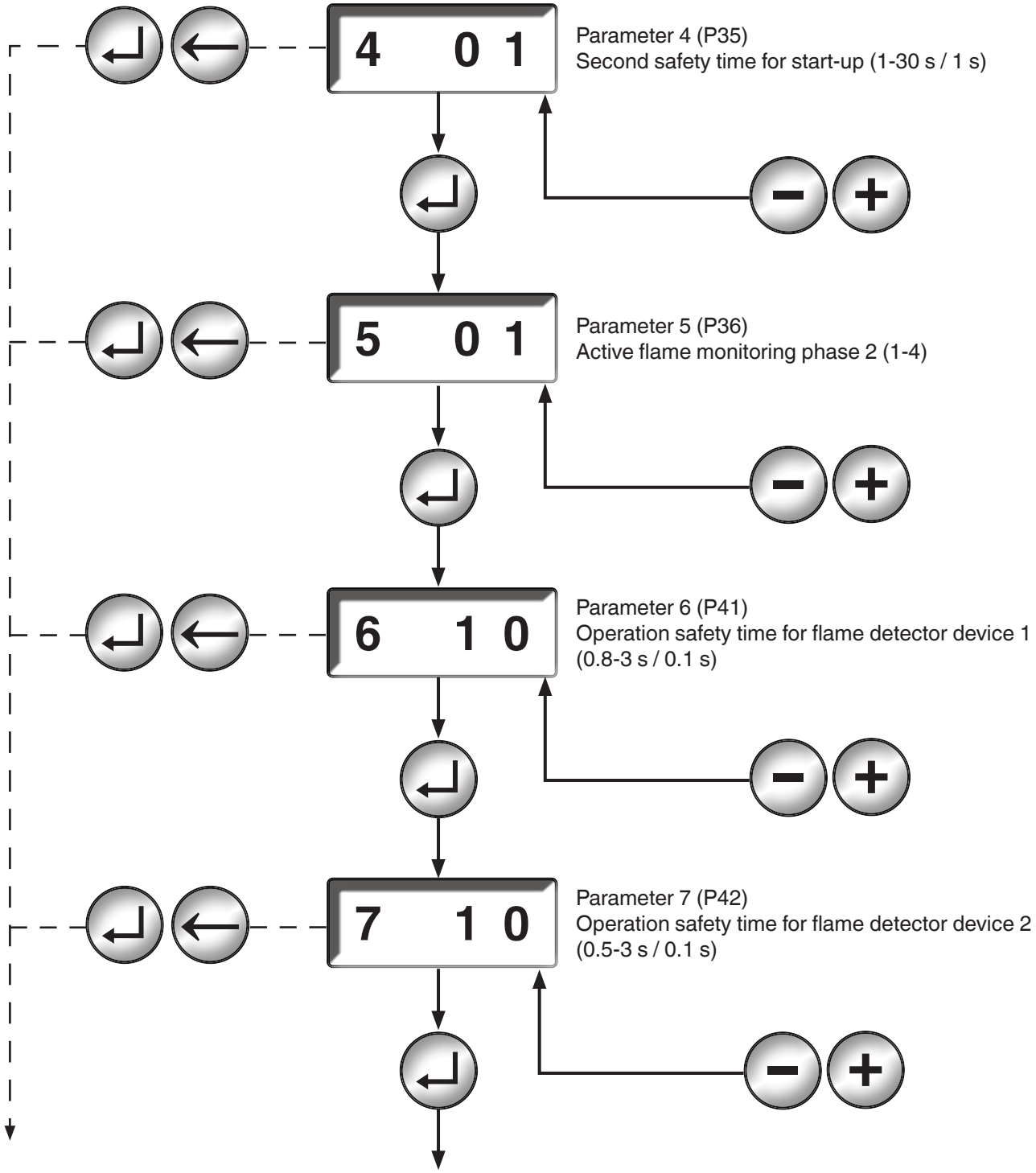
4 0 1
Parameter 4 (P35)
Second safety time for start-up (1-30 s / 1 s)
5 0 1
Parameter 5 (P36)
Active flame monitoring phase 2 (1-4)
6 1 0
Parameter 6 (P41)
Operation safety time for flame detector device 1
(0.8-3 s / 0.1 s)
7 1 0
Parameter 7 (P42)
Operation safety time for flame detector device 2
(0.5-3 s / 0.1 s)

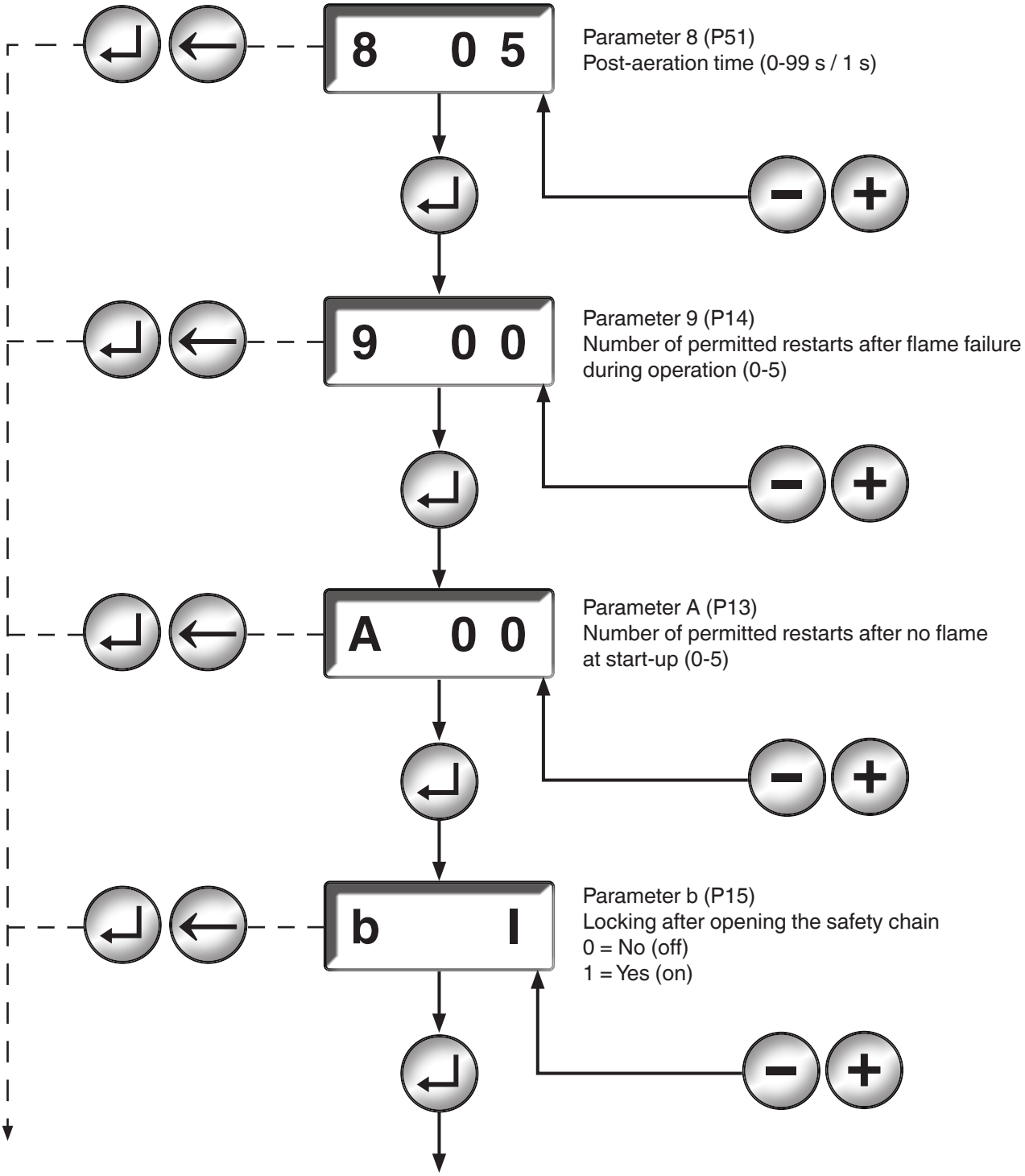
8 0 5
Parameter 8 (P51)
Post-aeration time (0-99 s / 1 s)
9 0 0
Parameter 9 (P14)
Number of permitted restarts after flame failure during operation (0-5)
A 0 0
Parameter A (P13)
Number of permitted restarts after no flame at start-up (0-5)
b I
Parameter b (P15)
Locking after opening the safety chain
0 = No (off)
1 = Yes (on)

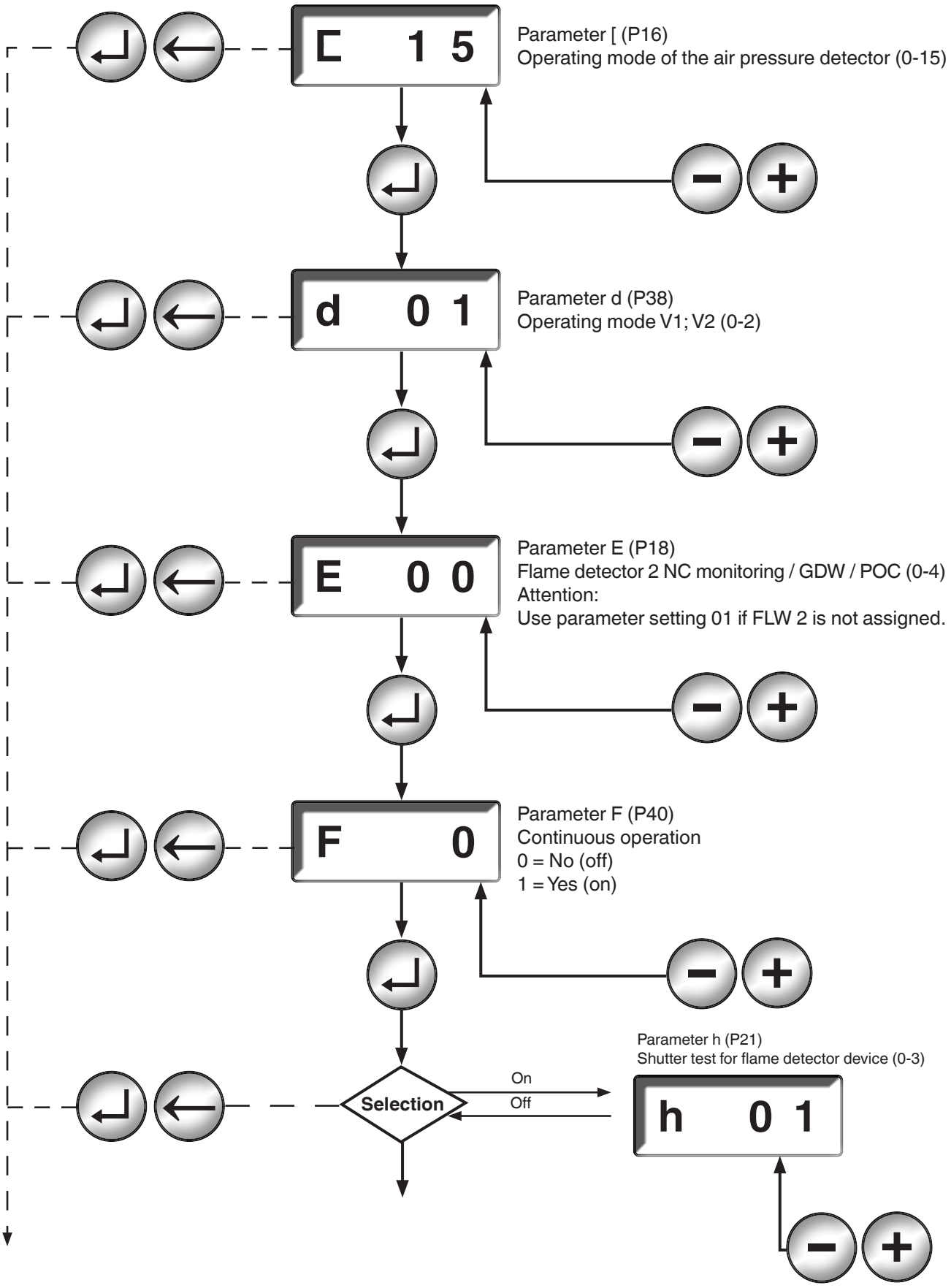
[15
Parameter [(P16)
Operating mode of the air pressure detector (0-15)
d 01
Parameter d (P38)
Operating mode V1; V2 (0-2)
E 00
Parameter E (P18)
Flame detector 2 NC monitoring / GDW / POC (0-4)
Attention:
Use parameter setting 01 if FLW 2 is not assigned.
F 0
Parameter F (P40)
Continuous operation
0 = No (off)
1 = Yes (on)
Selection
On
Off
Parameter h (P21)
Shutter test for flame detector device (0-3)
h 01

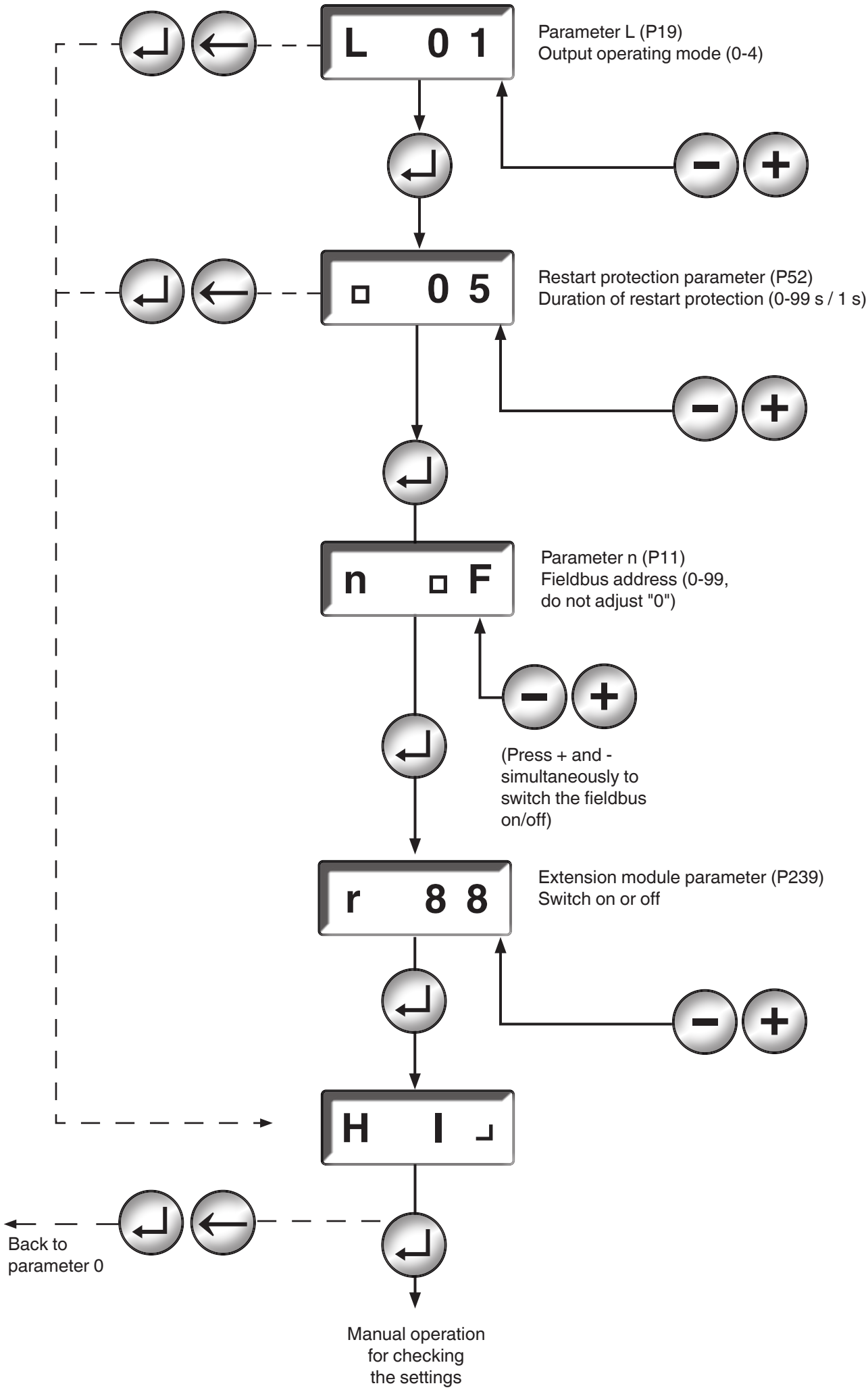
L 0 1
Parameter L (P19)
Output operating mode (0-4)
o 0 5
Restart protection parameter (P52)
Duration of restart protection (0-99 s / 1 s)
n o F
Parameter n (P11)
Fieldbus address (0-99,
do not adjust "0")
(Press + and -
simultaneously to
switch the fieldbus
on/off)
r 8 8
Extension module parameter (P239)
Switch on or off
H I o
Back to
parameter 0
Manual operation
for checking
the settings

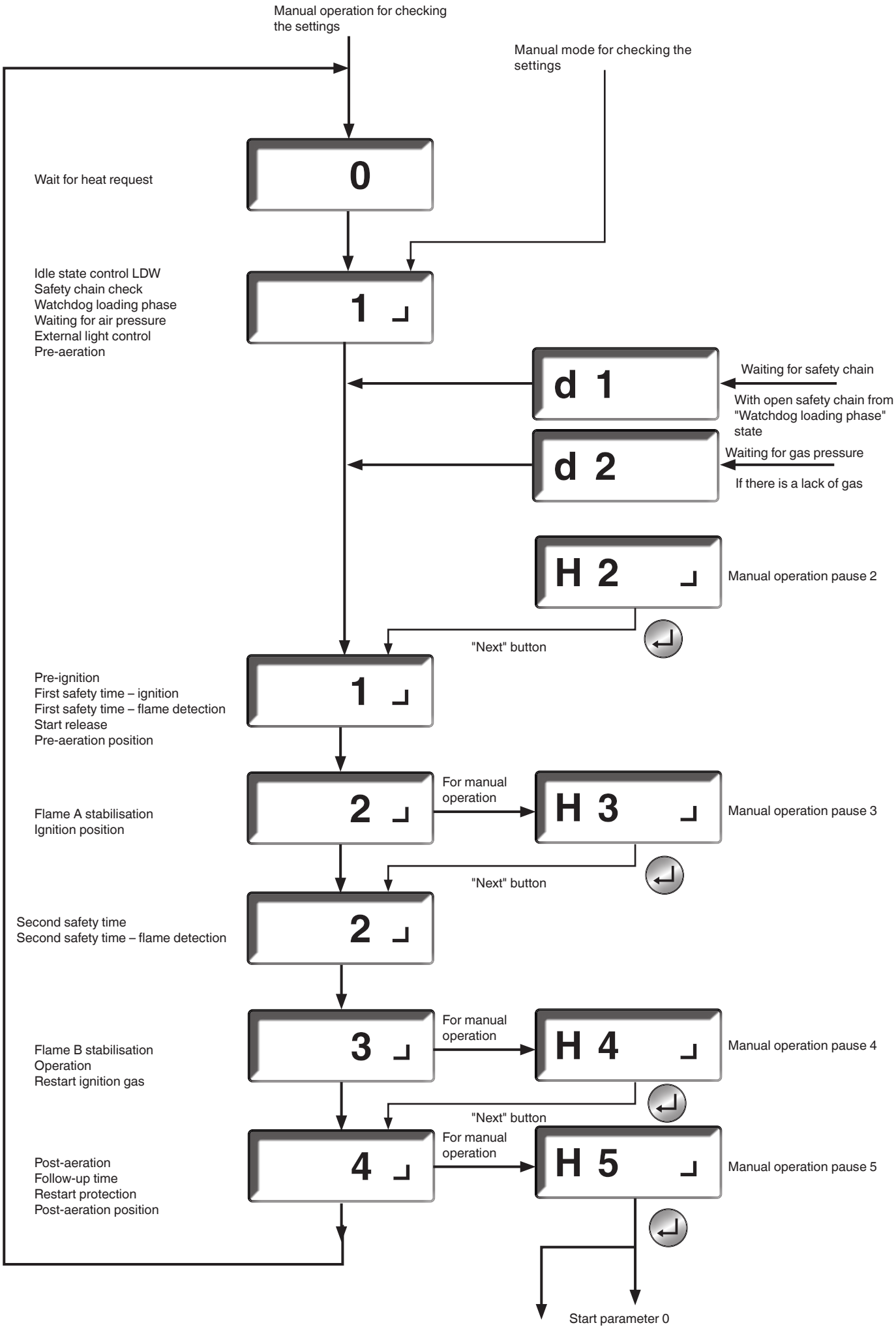
Manual operation for checking the settings
Manual mode for checking the settings
Wait for heat request
0
Idle state control LDW
Safety chain check
Watchdog loading phase
Waiting for air pressure
External light control
Pre-aeration
1
d 1
Waiting for safety chain
With open safety chain from "Watchdog loading phase" state
d 2
Waiting for gas pressure
If there is a lack of gas
H 2
Manual operation pause 2
"Next" button
Pre-ignition
First safety time – ignition
First safety time – flame detection
Start release
Pre-aeration position
1
Flame A stabilisation
Ignition position
2
For manual operation
H 3
Manual operation pause 3
"Next" button
Second safety time
Second safety time – flame detection
2
Flame B stabilisation
Operation
Restart ignition gas
3
For manual operation
H 4
Manual operation pause 4
"Next" button
Post-aeration
Follow-up time
Restart protection
Post-aeration position
4
For manual operation
H 5
Manual operation pause 5
Start parameter 0
Parameter setting complete
Interrupt voltage supply
Switch from "Para" to "Auto"

Reset display	
►	**The reset display is activated from the operating display or error display (not during automatic parameter setting).**
►	**The reset display can be used to delete the error memory, access level and resettable runtime meter or start-up counter, as well as to change the passwords for the service and OEM level.**
►	**This mode is exited again after 60 seconds if no further buttons are pressed during this time.**

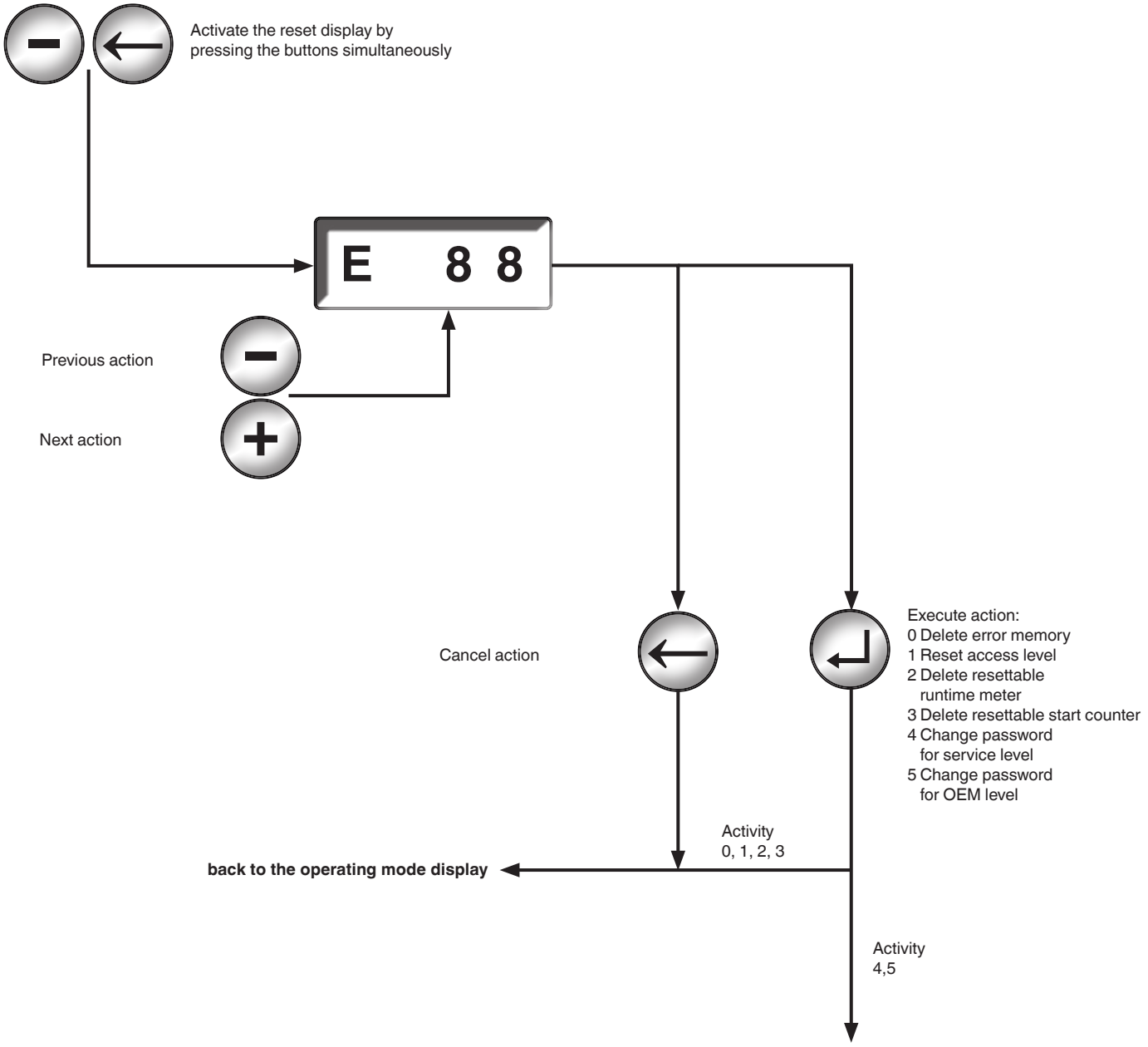

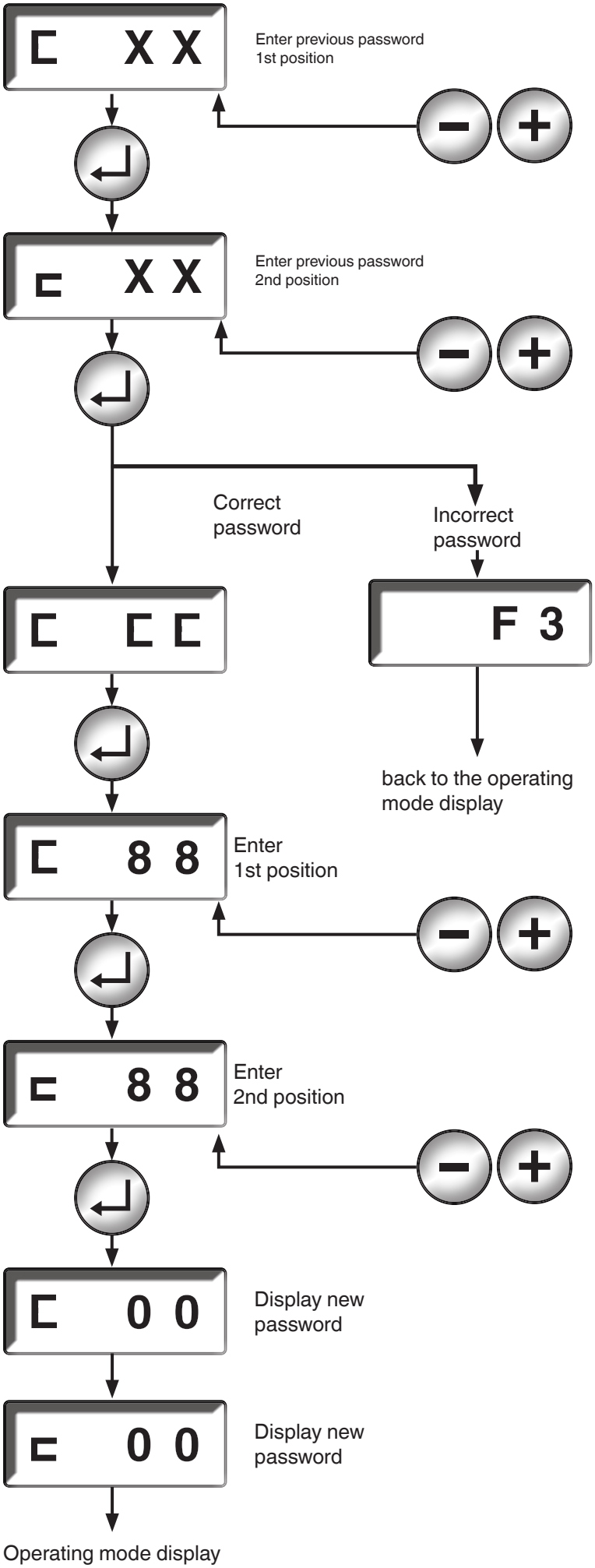
C XX
Enter previous password
1st position
C XX
Enter previous password
2nd position
Correct
password
Incorrect
password
C CC
F 3
back to the operating
mode display
C 88
Enter
1st position
C 88
Enter
2nd position
C 00
Display new
password
C 00
Display new
password
Operating mode display

MPA shutdown function	
►	**Press all buttons simultaneously** **MPA switches to malfunction interlock and displays error F 83** **Possible from all operating states** **Note: This function is not an emergency stop.**

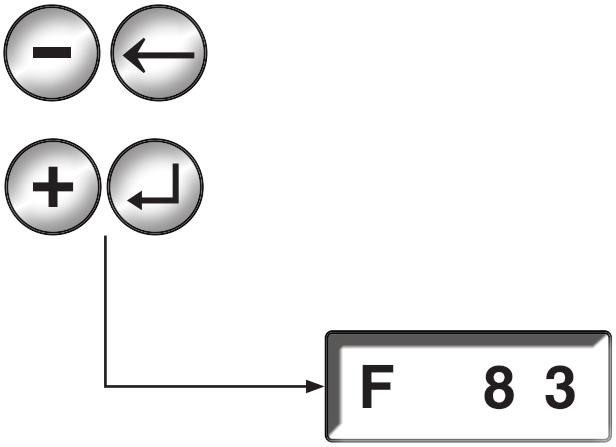

Error overview		
MPA 41xx error table for minimum display (MPA 4114) ordered by flash code		
Errors ID	**Internal error**	**Error description**
1	**F A2**	ERROR_SAFETY_CHAIN_OPEN
2	**F 60**	ERROR_PARAMETER_CHANGE_NOT_RELEASED
3	**F A7**	ERROR_NO_FLAME_DURING_FIRST_SAFETY_TIME
3	**F BC**	ERROR_NO_FLAME_DURING_SECOND_SAFETY_TIME
3	**F A9**	ERROR_FLAME_GONE_OUT_DURING_STABILISATION
4	**F A8**	ERROR_FLAME_GONE_OUT_DURING_OPERATION
5	**F AA**	ERROR_IDLE_STATE_CONTROL_LDW
5	**F AB**	ERROR_NO_AIR_PRESSURE
6	**F A6**	ERROR_EXTERNAL_LIGHT
7	**F 18**	ERROR_EXTERNAL_APPLICATION
8	**F 16**	ERROR_TWI_COMMUNICATION_AND_LOW_VOLTAGE

Error overview		
MPA 41xx error without error ID		
Errors ID	**Internal error**	**Error description Refer to the above tables for more information about individual errors**
F1 flashing		Low voltage Internal error: TWI bus blocked, system stop
F2 flashing		High MPA internal temperature
F3 flashing		The password was entered incorrectly when attempting to change it or was not confirmed using the unlock key
F4 flashing		The signal for remote unlocking via bus has been active for too long
F5 to F8		Not used
F9 flashing		Connection to bus missing. The bus module was connected but there is no connection to the master.
FA flashing	**x**	Failed to read the "Output operating mode" parameter; the output for operating mode was not switched
Fd flashing		Error for compressed air when cooling

Error overview			
MPA 41xx			
Error from the basic system (0x01 to 0x3F)			
Errors ID	**Flashing code MinDisp**	**Internal error**	**Error description**
F 01	**0**	X	ERROR_INTERRUPT_CYCL_STATE_FRAME
F 02	**0**	X	ERROR_WD_TRIGGERING
F 03	**0**		ERROR_WD_HARDWARE Possible cause of the error: Ambient temperature is too high Overvoltage
F 04	**0**		ERROR_UNLOCKING_DENIED Possible cause of the error: More than five unlocks in the last 15 minutes; wait or use enhanced unlock
F 05	**0**	x	ERROR_ROM_TEST
F 06	**0**	x	ERROR_RAM_TEST
F 07	**0**	x	ERROR_PINSHORTCIRCUIT
F 08	**0**	x	ERROR_STACK_OVERFLOW
F 09	**0**	x	ERROR_PROGRAMMING
F 0A	**0**	x	ERROR_DI_VARIABLE
F 0B	**0**	x	ERROR_IN_TABCONTROLERROR
F 0C	**0**	x	ERROR_CONFIGURATION Detailed errors: Additional byte 1: 0xC2: Function "Flame NC" is active, not the function "Flame NO". 0xC3: Air pressure detector 1 – monitoring in P16 is active but no HW input assigned. 0xC4: Air pressure detector 1 – input assigned but no monitoring active in P16. 0xC5: Behaviour for temperature controller input configured in P17 No HW input assigned. 0xC6: Shutter test for FLW 1 configured but FLW 1 is not assigned to any phase P33 / P36. 0xC7: Shutter test for FLW 2 configured but FLW 2 is not assigned to any phase P33 / P36. 0xC8: Air pressure detector 1 – monitoring in P66 is active but no HW input assigned. 0xC9: Air pressure detector 1 – input assigned but no monitoring active in P66.
F 0D	**0**	x	ERROR_CPU_TEST
F 0E	**0**	x	ERROR_EEPROM_PARAMETER
F 0F	**0**	x	ERROR_ADDRESS_TEST
F 10	**0**	x	ERROR_FUNCTION_ERROR_ID
F 11	**0**		ERROR_UNDERVOLTAGE Possible cause of the error: The permitted lower voltage limit was not met for at least a brief period
F 12	**0**		ERROR_POWERFAILURE Possible cause of the error: The supply voltage was interrupted during start-up, operation or a normal shutdown
F 13	**0**	x	ERROR_WD_STATUS Safety chain is not free of potential. Possible cause of the error: The fan continues running for too long. Remedy: Increase the time for the restart protection
F 14	**0**	x	ERROR_DI_SEGMENT_TEST
F 15	**0**	x	ERROR_SFRREGISTER_TEST

Error overview			
MPA 41xx			
Error from the basic system (0x01 to 0x3F)			
Errors ID	**Flashing code MinDisp**	**Internal error**	**Error description**
F 16	**0**		ERROR_TWI_COMMUNICATION Possible cause of the error: A TWI bus participant was connected to or disconnected from the bus while the MPA was still connected to mains power. Remedy: Only connect or disconnect TWI bus participants when the power is off. Too many participants are connected to the TWI bus or the TWI line is subject to EMC interference. Remedy: Use a shorter line or reduce the number of participants
F 17	**0**	x	ERROR_STATE_FRAME_OVERLOAD
F 18	**7**	**x**	**Additional byte 1: 0xB4 (VisionBox error)** A shutdown was initiated externally by selecting the "Switch off" function in the VisionBox PC software **Additional byte 1: 0x90 (internal MPA error P2)** Additional byte 4: 0x01 internal error: State frame Additional byte 4: 0x08 internal error: Stack overflow Additional byte 4: 0x09 internal error: Programming Additional byte 4: 0x16 internal error: TWI communication Additional byte 4: 0x1D internal error: Processor crash Additional byte 4: 0x1E internal error: Work group control **Additional byte 1 0xC2 (error in extension module)** Additional byte 4: 0x08 internal error: Stack overflow Additional byte 4: 0x09 internal error: Programming Additional byte 4: 0x0A internal error for DI variable Additional byte 4: 0x17 internal error: Work group control Additional byte 4: 0xE1 / 0xE2 calibration value not set in EEPROM or not OK
F 19	**0**		Not used
F 1A	**0**	**x**	ERROR_SWWD_DURING_INITIALISATION
F 1b	**0**	**x**	ERROR_BUFFEROVERFLOW
F 1C	**0**	**x**	ERROR_SYNCHRONISATION_DURING_INITIALISATION
F 1d	**0**	**x**	ERROR_PROCESSORFAILURE Possible cause of the error: MPA is subject to strong EMC interference
F 1E	**0**	**x**	ERROR_SFRREGISTER_STATEBLOCK

Error overview			
MPA 41xx			
Error from the extension functions (0x40 to 0x9F)			
Errors ID	**Flashing code MinDisp**	**Internal error**	
F 43	0	x	ERROR_TEST_IONISATIONINPUT
F 59	0		ERROR_MONITORING_INTERFACEP2 Internal error Fieldbus is not connected / was interrupted even though P38 setting = 2 (external specification V2)
F 60	2		ERROR_PARAMETER_CHANGE_NOT_RELEASED A monitored parameter has been changed
F 61	0		ERROR_SHUTTERTEST
F 6F	0		ERROR_INPUT_FUNCTION_DUPLICATED Input function on X16-X20 was assigned multiple times
F 70	0	x	ERROR_CHECK_PARAMETERS
F 80	0		ERROR_TIME_OUT_PARAMETER_MODE
F 81	0		ERROR_INVALID_BUS_ADDRESS Configuration P11 does not correspond to the address range of the fieldbus used Note: This error may occur when using an OFF setting for the value. In this case, it can be ignored.
F 82	0		Reserved
F 83	0		ERROR_SHUTDOWN Shutdown was triggered using a button combination
F 84	0		Reserved
F 85	0		ERROR_EM_RESET_OVERLOAD The extension module is not responding / communication has been interrupted
F 90	0		ERROR_PARAMETER Parameter error (note parameters outside of limits P240 to P249)
F 91	0		Reserved
F 92	0		Reserved
F 93	0		ERROR_FAN_INPUT_SIGNAL_INVALID_SETTING
F 94	0		ERROR_FAN_MONITORING_HIGHFIRE_PRE-AERATION High fire signal is missing during pre-aeration
F 95	0		ERROR_FAN_CONFIGURATION Error configuration: - Parameter P249, one or multiple bits with no function
F 96	0		ERROR_FAN_CONFIGURATION_TIMES_LOW_HIGH_MONITORING Error configuration: - P30 < 16 (1 s) - P51 < 16 (1 s)
F 97	0		ERROR_FAN_CONFIGURATION_SPEC_IGNITION_SPEED_BUS
F 98	0		ERROR_REGISTRATION P239 = 0, EM 2/x connected
F 99	0		ERROR_FAN_MONITORING_LOWFIRE_STABILISATION Incorrect "Low fire" signal during ignition and stabilisation
F 9A	0		ERROR_FAN_MONITORING_HIGHFIRE_POST-AERATION Incorrect "High fire" signal during post-aeration time
F 9b	0		ERROR_FAN_NO_IDLE_LDW_HIGH_LOW
F 9E	0		ERROR_P2_NOT_UNDERSTOOD Communication to MPA interrupted
F 9F	0		ERROR_EM_NOT_COMPATIBLE Extension module not compatible with MPA version

Error overview			
MPA 41xx			
Error from the extension functions (0x40 to 0x9F)			
Errors ID	**Flashing code MinDisp**	**Internal error**	**Error description**
F A0	0	x	ERROR_STATE_DURATION_TOO_LONG
F A1	0		Reserved
F A2	1		ERROR_SAFETY_CHAIN_OPEN Possible cause of the error: The safety chain has been opened or is not closed The wires of the safety chain are disconnected
F A3	0		Not used
F A4	0	x	ERROR_FEEDBACK_V1_INCORRECT
F A5	0	x	ERROR_FEEDBACK_V2_INCORRECT
F A6	6		ERROR_EXTERNAL_LIGHT Possible cause of the error: Earth connection to ionisation electrode Gas is escaping and being burned, e.g. by neighbouring burners Defective UV tube Connected flame detector device (UV, …) is detecting light or is defective
F A7	3		ERROR_NO_FLAME_DURING_FIRST_SAFETY_TIME Additional information byte 0: Bit0 = Flame at FLW 1, Bit1 = Flame at FLW 2 Additional information byte 1: Flame quality at FLW 1 Possible cause of the error: Ionisation electrode set incorrectly Ignition electrodes set incorrectly Defective insulation lines for ignition electrodes or ionisation electrode Gas vales do not open the gas flow Connected flame detector device (UV, …) is not detecting light or is defective Mains connection lines to MPA switched over ("N" and "L1")
F A8	4		ERROR_FLAME_GONE_OUT_DURING_OPERATION Additional information byte 0: Bit0 = Flame at FLW 1, Bit1 = Flame at FLW 2 Additional information byte 1: Flame quality at FLW 1 Possible cause of the error: Flame body defective Connected flame detector device (UV, …) is not detecting light or is defective
F A9	3		ERROR_FLAME_GONE_OUT_DURING_STABILISATION Additional information byte 0: Bit0 = Flame at FLW 1, Bit1 = Flame at FLW 2 Additional information byte 1: Flame quality at FLW 1
F AA	5		ERROR_IDLE_STATE_CONTROL_LDW Possible cause of the error: The air pressure detector is defective Air pressure is present during the idle state control, for example due to wind influence from the exhaust line, … The threshold value of the air pressure detector device is set incorrectly
F Ab	5		ERROR_NO_AIR_PRESSURE
F AC	0	x	ERROR_FEEDBACK_IGNITION_INCORRECT
F Ad	0		ERROR_LACKOFGAS_GDWMIN
F b0	0	x	ERROR_TESTCIRCUIT_EXTENSION
F b1-2	0		Reserved
F b3	0	x	ERROR_GASVALVEFEEDBACK_FALSE Additional information byte 0: 1 = V1, 2 = V2
F b4	0		ERROR_NO_AIR_PRESSURE_LDW1 Air pressure failure for LDW1
F b5	0		ERROR_NO_AIR_PRESSURE_LDW2 Air pressure failure for LDW2
F b6	0		ERROR_FINAL_SWITCH_MINIMAL GAS (POC) for V1

Error overview			
MPA 41xx			
Error from the extension functions (0x40 to 0x9F)			
Errors ID	**Flashing code MinDisp**	**Internal error**	**Error description**
F bA	0		ERROR_EXTERNAL_LIGHT_STARTUP Extraneous light > 1 min after heat request
F bC	0		ERROR_NO_FLAME_DURING_SECOND_SAFETY_TIME Additional information byte 0: Bit0 = Flame at FLW 1, Bit1 = Flame at FLW 2 Additional information byte 1: Flame quality at FLW 1
F bD	0		ERROR_FLAME_DETECTOR_NOT_SWITCHED_INVERSE
F bF	0		ERROR_SAFETY_CHAIN_NOT_POTENTIAL-FREE
F CE	0		ERROR_GDW_MAX
F CF	0		ERROR_NO_OPERATING_RELEASE Error due to lack of operating release in start-up / operation
F d4	0		ERROR_CONFIRMATION_SR_OUPUT_FALSE The network confirmation of output X14 / valve V2 shows a different status than expected.
F dd	0		ERROR_POSITION_NOT_REACHED The signal for confirming the motor position for the state was not issued within the maximum state time.
F dF	0		ERROR_START_RELEASE The signal for start release was not received within the specified time in the state or the idle state control failed or the HW input was not configured
F E0	0		ERROR_AIR_PRESSURE_COOLING The air pressure signal for cooling was not detected
F E1	0		ERROR_NETWORK_CONFIRMATION_INGITION_FALSE The network confirmation for the ignition output shows a different status than expected.
F E2	0		ERROR_EXTERNAL_LIGHT_PILOT Flame detection signals flame at the pilot burner even though only the main burner is active
F E3	0		ERROR_EXTERNAL_LIGHT_MAIN Flame detection signals flame at the main burner even though only the pilot burner is active.
F E4	0		ERROR_LIMIT_SWITCH_V2 The limit switch of the monitored gas valve V2 shows a different status than expected.

EMC-compliant installation

The ignition line must be laid separately to the other current-carrying lines.

EMC-compliant version for bus lines:

A line with a twisted pair of wires including shielding must be used.

The shielding on both cables must be connected flush to the shielding terminal for looping through the PE. The shielding must be connected to the PE rail at only one point (control cabinet / PLC / master).

The bus line must be laid separately to the other current-carrying lines.

The bus line must be terminated at the first device (usually the master) and last device in the chain using suitable termination. On the automatic gas burner control system side, the DIP switch or an external termination as an M12 plug on the MP4112 can be mounted on the connection of the second lead (bus out).

Setting the fieldbus address
If the automatic gas burner control system is to be connected to the bus, a valid address must be entered in parameter P11. If no address is entered, the display shows OFF during parameter setting. Press the button combination + and - to switch to change mode. You can now set the desired address.
If the address needs to be changed later, this can be done during operation.
- Profibus 1 to 126
- Modbus 1 to 247
Attention: Error F 81 may occur when changing the field address.

Important: Changes are only applied after a restart or an enhanced unlock of the automatic gas burner control system.
A bus connection is not required for operating the MPA. If no bus is connected, the MPA can receive a heat request only via the "Temperature controller" hardware input.
If a bus connection exists (indicated by a flashing character on the display), the heat request is given by means of bit 0 and bit 6 in AB0. If the automatic gas burner control system is disconnected from the bus again, it automatically switches over to reading the "Temperature controller" hardware input again after one minute.

When viewing the operating and error display, the current bus address can be seen by pressing the ← button.

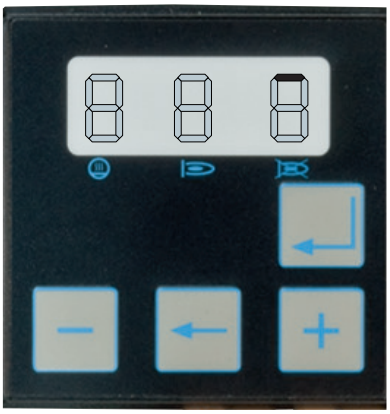

Bus termination
The bus must be terminated with a terminating resistor at the first and last device on the bus.

The shielding of the bus cable should be connected to PE to avoid electromagnetic radiation.

Pin assignment (M12-5 B-coded)

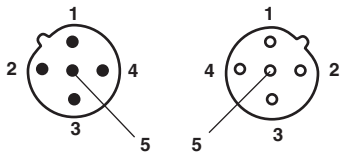

Pin **Socket**

Pin no.	Signal
1	+5 V supply for bus termination
2	Data line minus (A conductor)
3	Earth
4	Data line plus (B conductor)
5	Not assigned
Thread	Shielding (earth connection) recommended

Extension module MPA 41xx EM 2/4 Profibus DP interface, Modbus RTU / ASCII and shutter activation for flame detector device suitable for continuous operation

Universal extension module for integrating the MPA 41xx within fieldbus systems with up to 32 slaves.

Integrated functions:
- Profibus DP interface
- Modbus RTU / ASCII
- Activation for shutter module UV4x / shutter

The bus protocol can be selected using a DIP switch.
The bus can be used to be transmit commands to the MPA and query status information.
It also integrates an output for activating the shutter module for continuous operation of the UV 4x probes.

BUS protocol presettings

The 4-pin DIP switch is used to select the bus protocol and activate the respective bus termination.
The bus protocol may only be selected in a de-energised state. It is not possible to make changes during operation.

Bus protocol selection

DIP switch no. 4:

OFF position = Profibus
ON position = Modbus

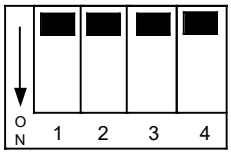

Bus termination

If termination is made via the DIP switch, no external terminating resistor is permitted to be plugged into the output socket.

If a termination is activated, the termination of the alternative bus protocol must always be deactivated.

Modbus termination

DIP switch no. 1:

ON position = Modbus termination 120 ohm



Profibus termination

DIP switches no. 2 and 3:

ON position = Profibus termination 220 ohm

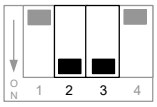

Setting the bus address

The bus address is entered in the parameter P11 (display indication "n"). The display shows OFF if an address has not yet been entered.
In parameter mode, a value between 1 and 99 (up to 126 via VisionBox) can be entered for the address. The change does not take effect until a restart occurs.

When viewing the operating and error display, the current bus address can be seen by pressing the ← button.

Bus interruption

Modbus
The query module requires at least one query per minute. If no query is received, either:

- a safety shutdown occurs if V2 is controlled via the bus
  or
- after another minute, the system switches over to the "Heat request" hardware input

Profibus
If the cyclical data stream is interrupted, the following occurs after a Profibus Watchdog period defined via the master (e.g. 2.5 s):
- a safety shutdown occurs if V2 is controlled via the bus
  or
- after another minute, the system switches over to the "Heat request" hardware input

Profibus bus data

The volume of input and output data is defined by the "modules" in the supplied GSD file for Profibus.

Profibus output data from master to MPA

The output data has 8 bits,
see the table below

Bit	Output byte AB0
0	Heat request
1	High performance / stage 2 or X14 for air purge
2	Remote unlocking
3	Output X11 on
4	Cooling X8 on
5	Start of main burner
6	Start release
7	Not used

Command content of the assigned bits:

Bit 0 (heat request) set to 1 by the master = heat request.

Bit 1 switches output X14 (depending on configuration of P38 and P64).

Bit 2 (remote unlocking) set to 1 by the master (min. 0.5 s, max. 5 s) = MPA is unlocked.

Bit 3 – as long as bit 3 is set to 1 by the master, the output X11 is switched on (P19 = 8).

Bit 4 (cooling) switches the air valve on output X8 if the automatic gas burner control system is not starting up or in operation. (Consider P64).

Bit 5 switches from pilot to main burner operation (consider P64).

Bit 6 continues from state 8 "Release start" (consider P64).

Eight modules are integrated in the supplied GSD file. Four of them – modules for Basic, Standard, Extended and Special Extended – do not contain any output bytes but only input bytes (information about the MPA). They cannot therefore issue any commands to the MPA.

Profibus input data from MPA to master

Input data provides information about the state of the MPA. The input data contains a different number of bytes depending on the data transfer module used. The lower bytes are always the same. That is, the Basic transfer is included in the Standard transfer and the Standard transfer is likewise included in the Extended transfer.

Basic transfer 2 bytes
EB0 and EB1

Standard transfer 4 bytes
EB0 to EB3

Extended transfer 12 bytes
EB0 to EB11

Special Extended transfer 20 bytes
EB0 to EB19

The bytes EB0, EB1, EB23 and EB24 Exceptional Extended transfer 32 bytes

EB0, EB23 and EB24 contain bit information.

The description of the bits shows the condition when the bit is set to 1. Some bits are active during a fault (indicated with "X"), others are set to 0.

Basic transfer area			
MPA 41xx			
Bit	**Input byte EB0**	**Description**	**During fault**
0	Flame 1	Signal for flame 1 is present	0
1	Flame 2	Signal for flame 2 is present	X
2	Flame 2 NC	Signal for flame 2 NC is present	X
3	flame detection	Resulting flame signal detected	X
4	LDW1	Air pressure present	X
5	Input for temperature controller	Signal for "Temperature controller" hardware input	X
6	Valve 1	Gas valve V1 open	X
7	Valve 2	Gas valve V2 open	X
Bit	**Input byte EB1**	**Description**	**During fault**
0	Ignition transformer	Ignition active	X
1	Manual operation	Manual operation active	X
2	Fan	Fan relay on	X
3	Not used		0
4	Temperature controller (HW + bus)	Evaluation between HW input for temperature controller and bus specification	X
5	Not used		0
6	Errors Bus connection	Interruption in bus communication	X
7	Fault	Fault in the automatic gas burner control system	X

Standard transfer area			
MPA 41xx			
Bit	**Input byte EB2**	**Description**	**During fault**
0-7	State number or error code	Current state number or error code in the case of a fault	X
Bit	**Input byte EB3**	**Description**	**During fault**
0-7	Flame quality	Quality of the flame over the ionisation input in 0.1 µA	0

Extended transfer area			
MPA 41xx			
Bit	**Input byte EB4**	**Description**	**During fault**
0-7	Resettable runtime meter	Low byte (byte 0) of the 32-bit runtime meter (Unit: s)	X
Bit	**Input byte EB5**	**Description**	**During fault**
0-7	Resettable runtime meter	Byte 1 of the 32-bit runtime meter (Unit: s)	X
Bit	**Input byte EB6**	**Description**	**During fault**
0-7	Resettable runtime meter	Byte 2 of the 32-bit runtime meter (Unit: s)	X
Bit	**Input byte EB7**	**Description**	**During fault**
0-7	Resettable runtime meter	High byte (byte 3) of the 32-bit runtime meter (Unit: s)	X
Bit	**Input byte EB8**	**Description**	**During fault**
0-7	Resettable start counter	Low byte (byte 0) of the 32-bit start counter	X
Bit	**Input byte EB9**	**Description**	**During fault**
0-7	Resettable start counter	Byte 1 of the 32-bit start counter	X
Bit	**Input byte EB10**	**Description**	**During fault**
0-7	Resettable start counter	Byte 2 of the 32-bit start counter	X
Bit	**Input byte EB11**	**Description**	**During fault**
0-7	Resettable start counter	High byte (byte 3) of the 32-bit start counter	X

Special Extended transfer area			
MPA 41xx			
Bit	**Input byte EB12**	**Description**	**During fault**
0-7	Resettable switching cycle counter V2	Low byte (byte 0) of the 32-bit switching cycle counter V2 (Unit: s)	X
Bit	**Input byte EB13**	**Description**	**During fault**
0-7	Resettable switching cycle counter V2	Byte 1 of the 32-bit switching cycle counter V2 (Unit: s)	X
Bit	**Input byte EB14**	**Description**	**During fault**
0-7	Resettable switching cycle counter V2	Byte 2 of the 32-bit switching cycle counter V2 (Unit: s)	X
Bit	**Input byte EB15**	**Description**	**During fault**
0-7	Resettable switching cycle counter V2	High byte (byte 3) of the 32-bit switching cycle counter V2 (Unit: s)	X
Bit	**Input byte EB16**	**Description**	**During fault**
0-7	Resettable runtime meter V2	Low byte (byte 0) of the 32-bit runtime meter V2 (in s)	X
Bit	**Input byte EB17**	**Description**	**During fault**
0-7	Resettable runtime meter V2	Byte 1 of the 32-bit runtime meter V2 (in s)	X
Bit	**Input byte EB18**	**Description**	**During fault**
0-7	Resettable runtime meter V2	Byte 2 of the 32-bit runtime meter V2 (in s)	X
Bit	**Input byte EB19**	**Description**	**During fault**
0-7	Resettable runtime meter V2	High byte (byte 3) of the 32-bit runtime meter V2 (in s)	X
Bit	**Input byte EB20**	**Description**	**During fault**
0-7	Detailed error information 1		X
Bit	**Input byte EB21**	**Description**	**During fault**
0-7	Detailed error information 4		X
Bit	**Input byte EB22**	**Description**	**During fault**
0-7	Error state number		X
Bit	**Input byte EB23**	**Description**	**During fault**
0	GDW min. / gas pressure min.		X
1	POC V1		
2	POC V2		
3	Start release	Signal from HW input	
4	V2 stepwise on	Signal from HW input	
5	Main burner on	Signal from HW input	
6	X14 on	Signal from HW input	
7	X8 cooling on	Signal from HW input	

Bit	Input byte EB24	Description	During fault
0	Info: Error for air pressure for cooling		X
1	Status output X11		
2	Warning of high temperature in MPA		
3	Air pressure detector 2		
4	Not used		
5	Not used		
6	Not used		
7	Not used		
Bit	**Input byte EB25**	**Description**	**During fault**
0-7	MPA temperature	Internal temperature of MPA in 1 °C increments. Note: An offset of 50 must be deducted from the transferred value	X
Bit	**Input byte EB26-29**	**Description**	**During fault**
0-7	Switching cycle counter X8		X
Bit	**Input byte EB30**	**Description**	**During fault**
0-7	Not used		X

Declaration of the Profibus interface	
MPA 41xx	
Manufacturer identification	ID number 0x0CF1 (Karl Dungs GmbH & Co. KG)
ASIC type	VPC3+C
Sync and freeze mode	Supported (Sync command: Freeze all outputs of the addressed slaves Freeze command: Freeze all inputs of the addressed slaves)
Cycle time	Maximum time until a response is received to a request telegram, depending on the bus transfer rate: 9.6 kBit/s to 500 kBit/s → 15 bit times 1 500 kBit/s → 20 bit times 3 000 kBit/s → 35 bit times 6 000 kBit/s → 50 bit times 12 000 kBit/s → 95 bit times
Diagnostics	The Profibus module creates external diagnostics if it detects an internal error. The diagnostics information of the DP slave consists of standard diagnostics information (6 bytes) and a user-specific error number for diagnostics information (2 bytes). Octet 1: Bit 0 = Diag.station does not exist (sets master) Bit 1 = Diag.station not_ready: Slave is not ready for data exchange Bit 2 = Diag.cfg_Fault: Configuration data does not match Bit 3 = Diag.ext_diag: Slave has external diagnostics data Bit 4 = Diag.not supported: Requested function is not supported in the slave Bit 5 = Diag.invalid_slave_response (sets slave to the fixed value 0) Bit 6 = Diag.prm_fault: Incorrect parameter setting (ID number etc.) Bit 7 = Diag.master_lock (sets master): Parameters of slave are set by another master Octet 2: Bit 0 = Diag.Prm_req: Slave requires new parameters Bit 1 = Diag.Stat_diag: Static diagnostics (byte diag bits) Bit 2 = Fixed at 1 Bit 3 = Diag.WD_ON: Response monitoring active Bit 4 = Diag.freeze_mode: Freeze command received Bit 5 = Sync_mode: Sync command received Bit 6 = Reserved Bit 7 = Diag.deactivated (sets master) Octet 3: Bit 0-bit 6 = Reserved Bit 7 = Diag.ext_overflow Octet 4: Diag master_add: Master address after parameter setting (FF without parameter setting) Octet 5: High byte ID number Octet 6: Low byte ID number
Parameters	Only cyclical communication supported
Automatic baud rate detection	Supported

Modbus bus data
Modbus RTU or ASCII mode

The Modbus protocol can be switched over to ASCII mode (see protocol) using the function code 0x41.
The setting is permanently saved in the slave.
The default value (upon delivery) is Modbus RTU.

Modbus output data from master to MPA

The output data has 16 bits, see the table below

Bit	Register address 0
0	Heat request
1	High performance / stage 2 or X14 for air purge
2	Remote unlocking
3	Output X11 on
4	Cooling X8 on
5	Start of main burner
6	Start release
7	Not used
8	Not used
9	Not used
10	Not used
11	Not used
12	Not used
13	Not used
14	Not used
15	Not used

Command content of the assigned bits:

Bit 0 (heat request) set to 1 by the master = heat request.

Bit 1 switches output X14 (depending on configuration of P38 and P64).

Bit 2 (remote unlocking) set to 1 by the master (min. 0.5 s, max. 5 s) = MPA is unlocked.

Bit 3 – as long as bit 3 is set to 1 by the master, the output X11 is switched on (P19 = 8).

Bit 4 (cooling) switches the air valve on output X8 if the automatic gas burner control system is not starting up or in operation. (Consider P64).

Bit 5 switches from pilot to main burner operation (consider P64).

Bit 6 continues from state 8 "Release start" (consider P64).

If AB0 is not described, the MPA functions via the HW inputs.

Modbus input data from MPA to master

Input data provides information about the state of the MPA.
An EBx contains 16 bits.

Basic transfer 4 bytes

This information can be read using the following function codes.
03 (0x03) Read Holding Registers
01 (0x01) Read Coils.

Basic transfer area

Bit	Register address 0	Description	During fault
0	Flame 1	Signal for flame 1 is present	0
1	Flame 2	Signal for flame 2 is present	X
2	Flame 2 NC	Signal for flame 2 NC is present	X
3	flame detection	Resulting flame signal detected	X
4	LDW	Sufficient air pressure present	X
5	Input for temperature controller	Signal for "Temperature controller" hardware input	X
6	Valve 1	Gas valve V1 open	X
7	Valve 2	Gas valve V2 open	X
8–15	Not used	Not used	0

Bit	Register address 1	Description	During fault
0	Ignition transformer	Ignition active	X
1	Manual operation	Manual operation active	X
2	Fan	Fan relay on	X
3	Not used		0
4	Temperature controller (HW + bus)	Evaluation between HW input for temperature controller and bus specification	X
5	Not used		0
6	Not used		0
7	Fault	Fault in the automatic gas burner control system	X
8-15	Not used	Not used	0

Standard transfer area

Bit	Register address 2	Description	During fault
0-7	State number or error code	Current state number OR error code in the case of a fault	X
8-15	Not used	Not used	0

Standard transfer area

Bit	Register address 3	Description	During fault
0-7	Flame quality	Quality of flame signal in 0.1 µA	0
8-15	Not used	Not used	0

Extended transfer area

Bit	Register address 4	Description	During fault
0-7	Resettable runtime meter	Low byte (byte 0) of the 32-bit runtime meter (in s)	X
8-15	Not used	Not used	0

Bit	Register address 5	Description	During fault
0-7	Resettable runtime meter	Byte 1 of the 32-bit runtime meter (in s)	X
8-15	Not used	Not used	0

Bit	Register address 6	Description	During fault
0-7	Resettable runtime meter	Byte 2 of the 32-bit runtime meter (in s)	X
8-15	Not used	Not used	0

Bit	Register address 7	Description	During fault
0-7	Resettable runtime meter	High byte (byte 3) of the 32-bit runtime meter (in s)	X
8-15	Not used	Not used	0

Bit	Register address 8	Description	During fault
0-7	Resettable start counter	Low byte (byte 0) of the 32-bit start counter	X
8-15	Not used	Not used	0

Bit	Register address 9	Description	During Fault
0-7	Resettable start counter	Byte 1 of the 32-bit start counter	X
8-15	Not used	Not used	0

Bit	Register address 10	Description	During fault
0-7	Resettable start counter	Byte 2 of the 32-bit start counter	X
8-15	Not used	Not used	0

Bit	Register address 11	Description	During fault
0-7	Resettable start counter	High byte (byte 3) of the 32-bit start counter	X
8-15	Not used	Not used	0

Bit	Register address 12	Description	During fault
0-7	Switching cycles counter V2	Low byte (byte 0) of the 32-bit switching cycle counter V2	X
8-15	Not used	Not used	0

Bit	Register address 13	Description	During fault
0-7	Switching cycles counter V2	Byte 1 of the 32-bit switching cycle counter V2	X
8-15	Not used	Not used	0

Bit	Register address 14	Description	During fault
0-7	Switching cycles counter V2	Byte 2 of the 32-bit switching cycle counter V2	X
8-15	Not used	Not used	0

Bit	Register address 15	Description	During fault
0-7	Switching cycles counter V2	High byte (byte 3) of the 32-bit switching cycle counter V2	X
8-15	Not used	Not used	0

Bit	Register address 16	Description	During fault
0-7	Runtime meter V2	Low byte (byte 0) of the 32-bit runtime meter V2 (in s)	X
8-15	Not used	Not used	0

Bit	Register address 17	Description	During fault
0-7	Runtime meter V2	Byte 1 of the 32-bit runtime meter V2 (in s)	X
8-15	Not used	Not used	0

Bit	Register address 18	Description	During fault
0-7	Runtime meter V2	Byte 2 of the 32-bit runtime meter V2 (in s)	X
8-15	Not used	Not used	0

Bit	Register address 19	Description	During fault
0-7	Runtime meter V2	High byte (byte 3) of the 32-bit runtime meter V2 (in s)	X
8-15	Not used	Not used	0

Bit	Register address 20	Description	During fault
0-7	Additional error information	First additional error information byte	X
8-15	Not used	Not used	0

The following section collates the information required for complete use of the 16-bit register.
This query can be used if the bus load needs to be minimized.

Bit	Register address 21	Description	During fault
0	Flame 1	Signal for flame 1 is present	0
1	Flame 2	Signal for flame 2 is present	X
2	Flame 2 NC	Signal for flame 2 NC is present	X
3	Flame detection	Resulting flame signal detected	X
4	LDW	Sufficient air pressure present	X
5	Input for temperature controller	Signal for "Temperature controller" hardware input	X
6	Valve 1	Gas valve V1 open	X
7	Valve 2	Gas valve V2 open	X
8	Ignition transformer	Ignition active	X
9	Manual operation	Manual operation active	X
10	Fan	Fan relay on	X
11	Not used		0
12	Temperature controller (HW + bus)	Evaluation between HW input for temperature controller and bus specification	X
13	Not used		0
14	Not used		0
15	Fault	Fault in the automatic gas burner control system	X

Bit	Register address 22	Description	During fault
0-7	State number or error code	Current state number OR error code in the case of a fault	X
8-15	Flame quality or additional error information 1	Quality of the flame over the ionisation input in 0.1 µA	0

Bit	Register address 23	Description	During fault
0-7	Resettable runtime meter	Low byte (byte 0) of the 32-bit runtime meter (in s)	X
8-15	Resettable runtime meter	Byte 1 of the 32-bit runtime meter (in s)	0

Bit	Register address 24	Description	During fault
0-7	Resettable runtime meter	Byte 2 of the 32-bit runtime meter (in s)	X
8-15	Resettable runtime meter	High byte (byte 3) of the 32-bit runtime meter (in s)	X

Bit	Register address 25	Description	During fault
0-7	Resettable start counter	Low byte (byte 0) of the 32-bit start counter	X
8-15	Resettable start counter	Byte 1 of the 32-bit start counter	X

Bit	Register address 26	Description	During fault
0-7	Resettable start counter	Byte 2 of the 32-bit start counter	X
8-15	Resettable start counter	High byte (byte 3) of the 32-bit start counter	X

Bit	Register address 27	Description	During fault
0-7	Switching cycles counter V2	Low byte (byte 0) of the 32-bit switching cycle counter V2	X
8-15	Switching cycles counter V2	Byte 1 of the 32-bit switching cycle counter V2	X

Bit	Register address 28	Description	During fault
0-7	Switching cycles counter V2	Byte 2 of the 32-bit switching cycle counter V2	X
8-15	Switching cycles counter V2	High byte (byte 3) of the 32-bit switching cycle counter V2	X

Bit	Register address 29	Description	During fault
0-7	Runtime meter V2	Low byte (byte 0) of the 32-bit runtime meter V2	X
8-15	Runtime meter V2	Byte 1 of the 32-bit runtime meter V2	X

Bit	Register address 30	Description	During fault
0-7	Runtime meter V2	Byte 2 of the 32-bit runtime meter V2	X
8-15	Runtime meter V2	High byte (byte 3) of the 32-bit runtime meter V2	X

Bit	Register address 31	Description	During fault
0-7	Additional error information	First additional error information byte	X
8-15	Not used	Not used	0

Bit	Register address 32	Description	During fault
0-7	Software article number	Low byte: LSByte of the u24 article number SW P1	
8-15	Software article number	High byte: u24 article number SW P1	

Bit	Register address 33	Description	During fault
0-7	Software article number	Low byte: MSByte of the u24 article number SW P1	
8-15	Software article number	High byte: Index article number SW P1	

Bit	Register address 34	Description	During fault
0-7	Production date	Low byte: Production day for the MPA	
8-15	Production date	High byte: Production month for the MPA	

Bit	Register address 35	Description	During fault
0-7	Production date	Low byte: Production year for the MPA	
8-15	Not used	High byte: Unassigned	

Bit	Register address 36	Description	During fault
0-7	Device number	Low byte: LSByte of the u32 device number for the MPA	
8-15	Device number	High byte: u32 device number for the MPA	

Bit	Register address 37	Description	During fault
0-7	Device number	Low byte: u32 device number for the MPA	
8-15	Device number	High byte: MSByte of the u32 device number for the MPA	

Bit	Register address 38	Description	During fault
0-7	Hardware article number	Low byte: LSByte of the u24 article number for HW	
8-15	Hardware article number	High byte: u24 article number for HW	

Bit	Register address 39	Description	During fault
0-7	Hardware article number	Low byte: MSByte of the u24 article number for HW	
8-15	Hardware article number	High byte: Index article number for HW	

Bit	Register address 40	Description	During fault
0-7	Hardware article number	Low byte: LSByte of the u24 article number for the device	
8-15	Hardware article number	High byte: u24 article number for the device	

Bit	Register address 41	Description	During fault
0-7	Article number for device	Low byte: MSByte of the u24 article number for the device	X
8-15	Article number for device	High byte: Index article number for the device	0

Bit	Register address 42	Description	During fault
0-7	Article number for extension module software	Low byte: LSByte of the u24 article number for EM SW	
8-15	Article number for extension module software	High byte: u24 article number for EM SW	

Bit	Register address 43	Description	During fault
0-7	Article number for extension module software	Low byte: MSByte of the u24 article number for EM SW	
8-15	Article number for extension module software	High byte: Index article number for EM SW	

Bit	Register address 44	Description	During fault
0-7	Production date of extension module	Low byte: Production day of EM	
8-15	Production date of extension module	High byte: Production month of EM	

Bit	Register address 45	Description	During fault
0-7	Production date of extension module	Low byte: Production year of EM	
8-15	Not used	High byte: Unassigned	

Bit	Register address 46	Description	During fault
0-7	Device number for extension module	Low byte: LSByte of the u32 device number for the EM	
8-15	Device number for extension module	High byte: u32 device number for the EM	

Bit	Register address 47	Description	During fault
0-7	Device number for extension module	Low byte: u32 device number for the EM	
8-15	Device number for extension module	High byte: MSByte of the u32 device number for the EM	

Bit	Register address 48	Description	During fault
0-7	Article number for extension module hardware	Low byte: LSByte of the u24 article number for the EM HW	
8-15	Article number for extension module hardware	High byte: u24 article number for the EM HW	

Bit	Register address 49	Description	During fault
0-7	Article number for extension module hardware	Low byte: MSByte of the u24 article number for the EM HW	
8-15	Article number for extension module hardware	High byte: Index article number for the EM HW	

Bit	Register address 50	Description	During fault
0-7	Article number for extension module hardware	Low byte: LSByte of the u24 article number for the EM device	
8-15	Article number for extension module hardware	High byte: u24 article number for the EM device	

Bit	Register address 51	Description	During fault
0-7	Article number for extension module	Low byte: MSByte of the u24 article number for the EM device	
8-15	Article number for extension module	High byte: Index article number for the EM device	

Bit	Register address 52	Description	During fault
0-7	Additional error information 4	u8 error information 4 (high byte: unassigned)	
8-15	Not used		

Bit	Register address 53	Description	During fault
0-7	Error state	u8 error state number (high byte: unassigned)	
8-15	Not used		

Bit	Register address 54	Description	During fault
0	GDW min. / gas pressure min.		
1	POC V1		
2	POC V2		
3	Start release	Signal from HW input	
4	V2 stepwise on	Signal from HW input	
5	Main burner on	Signal from HW input	
6	X14 on	Signal from HW input	
7	X8 cooling on	Signal from HW input	
8	Info: Error for air pressure for cooling		
9	Status output X11		
10	Warning of high MPA temperature		
11	Air pressure detector 2 / air pressure switch 2		
12	Not used		
13	Not used		
14	Not used		
15	Not used		

Bit	Register address 55	Description	During fault
0-7	Internal temperature of MPA	u8 MPA internal temperature (high byte: unassigned) in 1 °C; an offset of 50 must be deducted from the transferred value	
8-15	Not used		

Bit	Register addresses 56-57	Description	During fault
0-7	Switching cycles counter X8	u32 switching cycles counter X8 for fan / air valve	
8-15	Not used		

Bit	Register address 58	Description	During fault
0-7	Not used	Not used	
8-15	Not used		

Line lengths

Designation	Line length	Electrical data
Profibus DP	Max. 1 200 m	Galvanically isolated 4 kV
Modbus	Max. 1 000 m	Galvanically isolated 4 kV

Supported baud rates

Profibus

The following table is valid only for line type A according to EN50170

Transfer speed in kBit/s	9.6	19.2	45.45	93.75	187.5	500	1 500	3 000	6 000	12 000
Max. line length in m	1 200	1 200	1 200	1 200	1 000	400	200	100	100	100

Modbus

9 600 baud, 19 200 baud,
19 200 baud and 57 600 baud

The baud rate can be changed during operation using the function code 0x41. This setting is saved permanently to the slave.
The associated parity bit can also be specified. The settings "none", "even" and "odd" are supported.
The default values (upon delivery) are 19 200 baud and even parity.

Bus termination

The bus must be terminated with a terminating resistor at the first and last device in the bus structure.
As an alternative to internal termination (see above), an external bus terminating resistor can be connected instead of a continuing bus cable.

The shielding of the bus cable should be should be earthed (PE) to avoid electromagnetic radiation.

Flame detector device test for UV4x EM 1/1 shutter

The EM 2/4 module contains an activation controller for the UV 4x / shutter.
The use of the UV 4X / shutter allows a UV flame detector device UV 41 (HE) or UV 42 to be used in applications that require continuous operation.
A maximum of two UV4x-EM 1/1 shutter modules can be connected.
The shutter signal can also be used for continuous operation of an FLW 41I flame detector device.

The control signal is independent of the use of the bus interface.

Connection (MPA 411x)

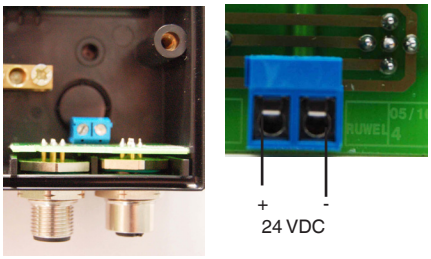

Supply voltage:

24 VDC

Current:

Max. 200 mA

Shutter frequency:

1 shutter signal / 10 minutes; the frequency cannot be adjusted.

Parameter setting:

The shutter signal is switched on/off by parameter P21 (parameter "h" on the display).

Extension module MPA 41xx EM 2/6

The multifunctional extension module EM 2/6 provides the following functions:

- State-dependent relay outputs
- PWM output for speed control of DC fans with power specification via PMW signal
- Voltage output 0-10 V
- Current output 4-20 mA
- Profibus interface
- Modbus interface
- Output for activating the UV 4x-EM 1/1 shutter module or the continuous operation function of the FLW 41I.

The EM 2/6 MPA 411x requires the use of the separately available mounting base MPA 411x WB, item no. 260903.

The EM 2/6 for MPA 412x is integrated within the metal housing.

Attention

Mounting of the EM 2/6 modules must be performed only by DUNGS or by third parties authorized by Dungs.

Functions

State-dependent relay outputs:

Relay contacts are opened or closed depending on the program state. The externally applied voltage is switched to the required consumers.

Application
- Signalling of operating states
- Activation of analogue actuators

Using analogue actuators allows two position messages to be reported to the EM 2/6.

PWM signal for activating speed-controlled fans, for example.
During the "Operation" state, the PWM signal can be modulated by applying a mains voltage signal. The speed is controlled with no speed feedback.

Analogue output for current / voltage

The current signal (4-20 mA) or voltage signal (0-10 VAC) can be modulated by applying a mains voltage signal.

Fieldbus communication

The EM 2/6 extension module contains integrated Profibus DP and Modbus interfaces.
For a description, see the EM 2/4 module

Flame detector devices, shutter activation for continuous operation.

The activation controller for the EM 1/1 shutter module, which is required for continuous operation of DUNGS UV 4 and FLW 41I flame detector devices, is integrated in the EM 2/6.

Dimensions of plug-in socket
MPA 411x with EM 2/6

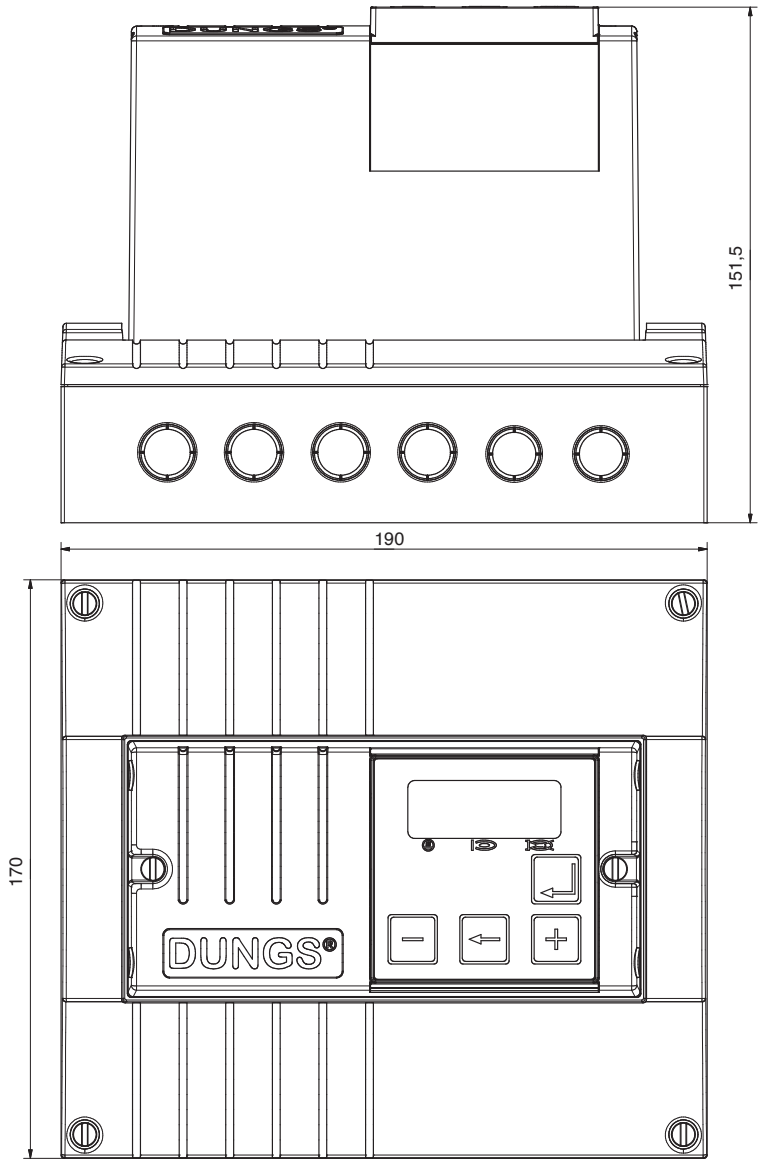

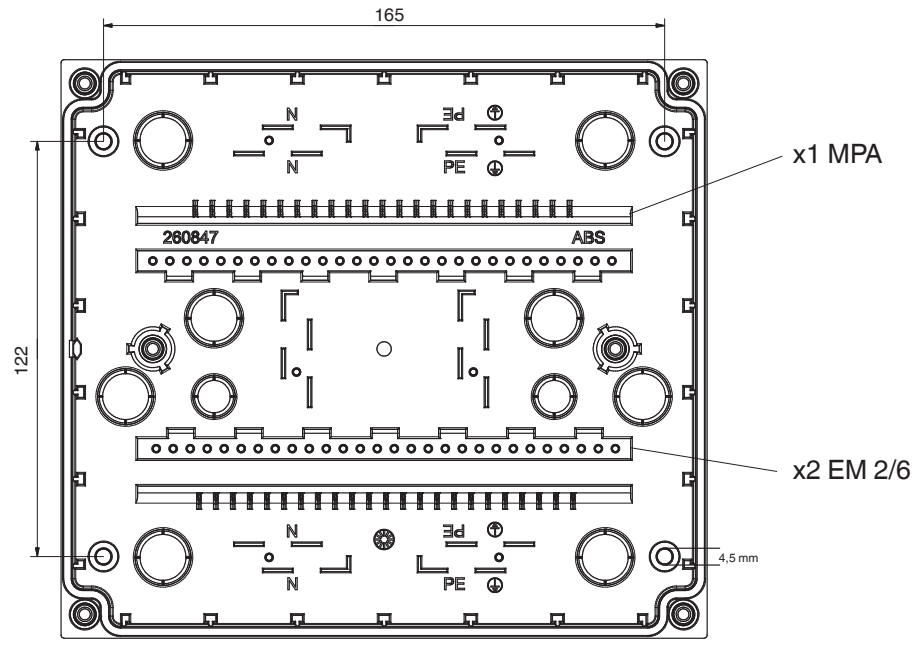

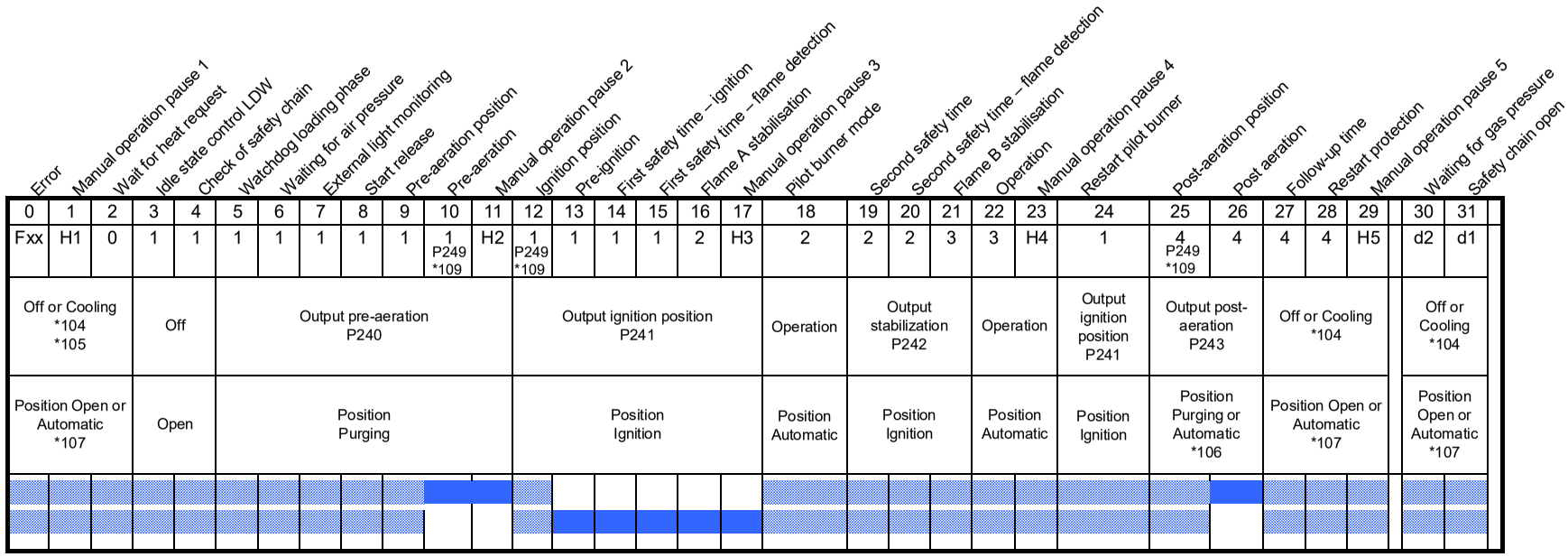

Legend

Input ON OFF dosn't matter

*103) Monitoring of the "High fire" and "Low fire" inputs can be activated or deactivated using parameter P249.
*104) P249, bits 2+3 can be used to define whether the speed is "Off" or whether the fan is working in cooling mode.
*105) The start value for the speed after a software restart is specified using P244 if cooling mode is active.
*106) P249 bit 8 specifies whether the "Aeration" position is also active during post-aeration.
*107) P249 bit 4 specifies whether the "Modulation switch" output is open or connected to the "Automatic" output.
*108) If "High fire" monitoring is active (see *103), the time for monitoring = pre-aeration time must be at least one second.
*109) In these position states, the EM should wait with the release at µC_P2 until the end stops are reached (P248=0) or the time (P248 > 0) has elapsed.

Technical data

Outputs*				
Designation	**Safety-relevant**	**Output type**	**Line length**	**Electrical data**
Fan activation		PWM 4 kHz, Without speed capture feedback	Max. 10 m	~17 V DC, safety extra-low voltage (3 lines: GND, +17 V DC, PWM control signal)
Frequency converter activation		0-10 V 4-20 mA	Max. 10 m	10 V DC, safety extra-low voltage
Shutter activation		Switching contact	Max. 100 m	24 V DC, safety extra-low voltage

Inputs*			
Designation	**Input type**	**Line length**	**Electrical data**
"High fire" feedback	Switching contact	Max. 100 m	115 / 230 V AC
"Low fire" feedback	Switching contact	Max. 100 m	115 / 230 V AC
Power +	Switching contact	Max. 100 m	115 / 230 V AC
Power -	Switching contact	Max. 100 m	115 / 230 V AC

Other functions*			
Designation	**Input type**	**Line length**	**Electrical data**
Switch for option: 0-10 V, 4-20 mA or PWM output	Switch		Plastic housing: Can be switched over only when the extension module is removed. Metal housing: No removal necessary Attention: Switch over only in a de-energised state
Modbus interface	Modbus based on RS485	Max. 1 000 m	RS485 galvanically isolated 4 kV
DIP switch for terminating resistors, Modbus	DIP switch		For activating or deactivating the RS485 terminating resistors (Modbus)
Profibus DP		Max. 1 200 m	Galvanically isolated 4 kV

*** The connection lines used must be suitable for an ambient temperature of at least 75 °C (167 °F)**

Pin assignment of EM 2/6 for MPA 4122 version

Connector 1 (analogue on/off 115 VAC / 230 VAC)

21: COM
22: "High fire" switching position
23: "Low fire" switching position
24: Automatic switching position

Connector 2 (115 VAC / 230 VAC inputs)

26: N
27: "Low fire" feedback
28: "High fire" feedback
29: Power -
30: Power +

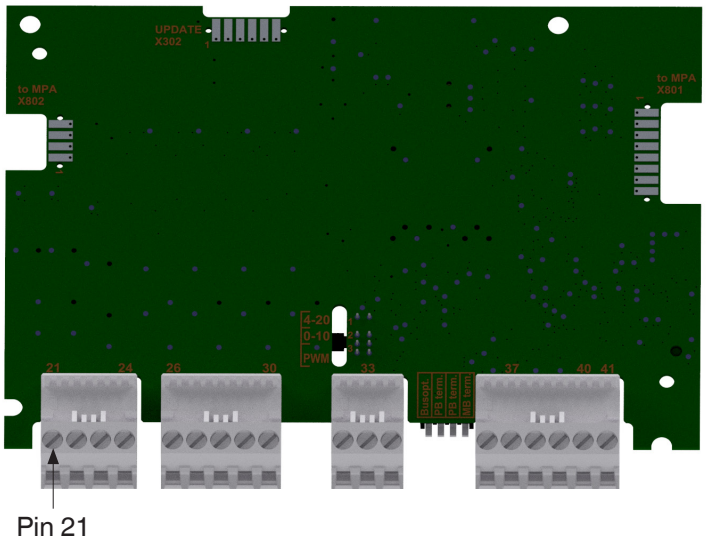

Pin 21

Connector 3 (analogue out)

PWM output (switch at bottom)
32: DGND
33: PWM
34: VCC out (10.5-24 VDC)

Analogue output 0-10 V
(switch in centre)
32: DGND
33: Analogue output 0-10 V
34: VCC out (10,5...24 VDC)

Analogue output 4-20 mA
(switch at top)
32: DGND
33: Analogue output 4-20 mA
34: VCC out (10.5-24 VDC)

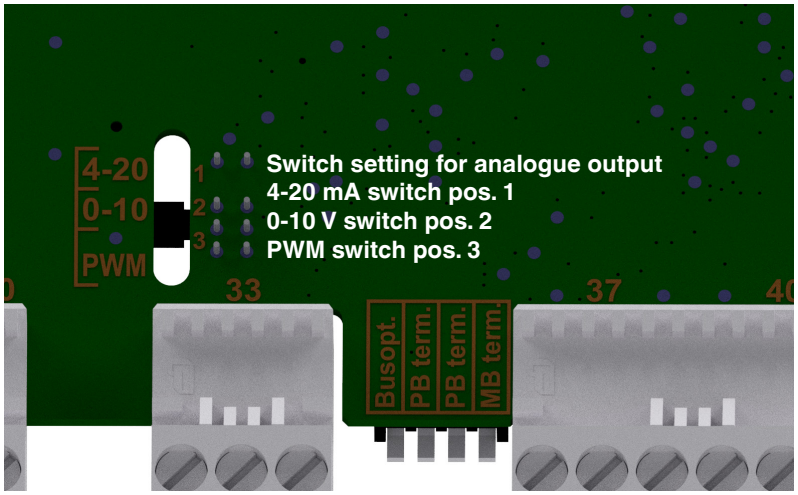

Connector 4 (bus and shutter):

36: GND
37: VCC 5 V (for bus termination)
38: B (red)
39: A (green)
40: Shutter +
41: Shutter -

Connection diagram for MPA 4122 EM 2/6 V2.0

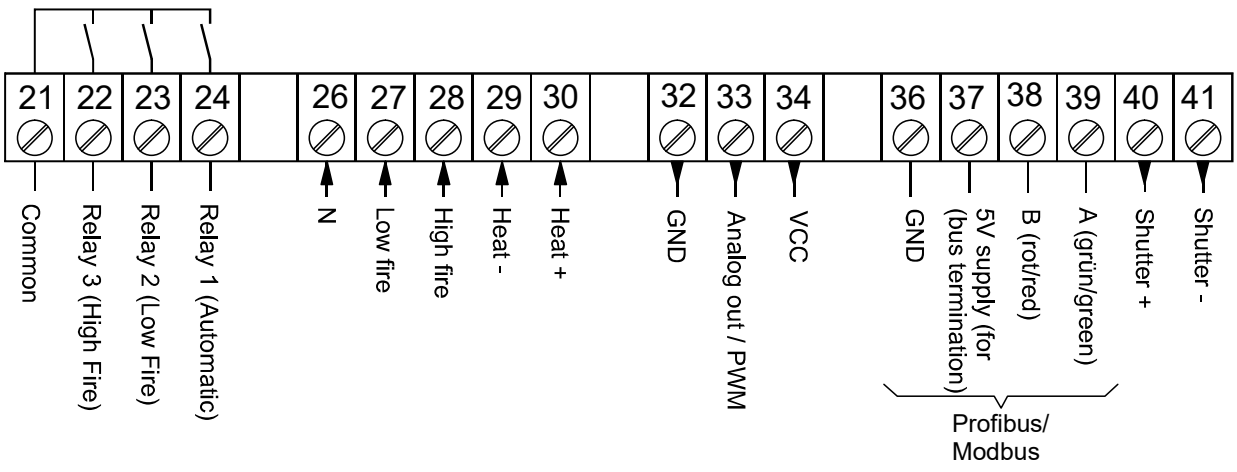

Pin assignment of EM 2/6 for MPA 411x version
Connector 1 (analogue on/off 115 VAC / 230 VAC)

21: COM
22: "High fire" switching position
23: "Low fire" switching position
24: Automatic switching position

Connector 2 (115 VAC / 230 VAC inputs)

26: N
27: "Low fire" feedback
28: "High fire" feedback
29: Power -
30: Power +

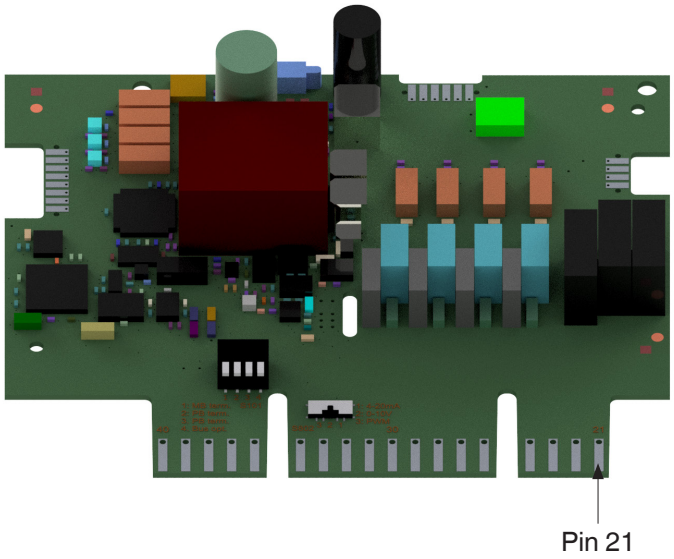

Connector 3 (analogue out)

PWM output (switch at bottom)
32: DGND
33: PWM
34: VCC out (~17 VDC)

Analogue output 0-10 V
(switch in centre)
32: DGND
33: Analogue output 0-10 V
34: VCC out (~17 VDC)

Analogue output 4-20 mA
(switch at top)
32: DGND
33: Analogue output 4-20 mA
34: VCC out (~17 VDC)

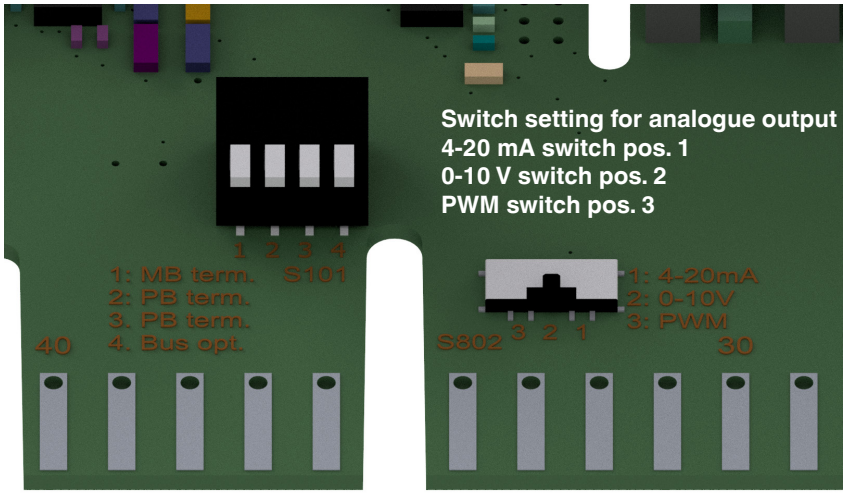

Connector 4 (bus and shutter):

36: GND / shutter -
37: VCC 5 V (for bus termination)
38: B (red)
39: A (green)
40: Shutter +

Connection diagram for MPA 411x EM 2/6 V2.0

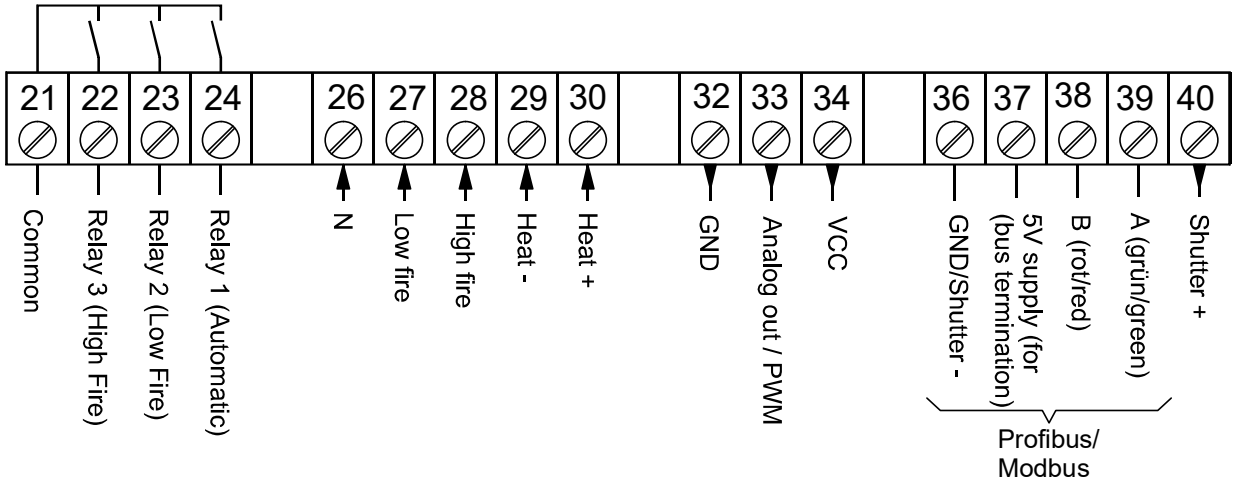

Parameters

All values for "speed" and similar settings relate to the PWM control signal and do not indicate the actual speed of the fan. It is not possible to evaluate the speed of the fan.

Depending on the required access level, the values P240 to P249 can be changed after entering a password. Read access is possible for all parameters, irrespective of the access level.

Parameters can be changed using the VisionBox or on the display.

Changed parameters are applied to the fan control after a maximum of 10 seconds.

Overview of fan control parameters		
VisionBox no.	**Display no.**	**Meaning**
240	P r0	Pre-ventilation control level
241	P r1	Ignition control level
242	P r2	Stabilisation control wheel
243	P r3	Post-ventilation control level
244	P r4	Start control level Cooling and fault
245	P r5	Min. speed
246	P r6	Max. speed
247	P r7	Transition period
249	P r9	Bit functions (see description P249)

Parameters			
Parameter description			
Parameters	**Designation**	**Description**	**Setting / Examples**
P104	**Compatibility mode for V1.1 bus communication**	If an EM2/4, EM2/5 or EM2/6 extension module is installed, this parameter can be used to reset the type of bus communication to the previous version (MPA41xx V1.1).	Bit0 = 0: Flame 2 NC Bit0 = 1: Flame 2 NC + GDW + POC/X17) Bit1 = 0: Ionisation signal 0...255, resolution 1/10µA Bit1 = 1: Ionisation signal 0...58 Digits
P239	**Extension module**	Configuration of whether an extension module is installed	Value range: 0: No EM installed 1: EM installed
P240	**Pre-aeration position**	Parameter value applies for pre-aeration	Adjustable from 0.00 % to 100.00 % Resolution: 0.01 %
P241	**Ignition position**	The parameter value is used for the states (ignition and flame detection) of the MPA 41xx. It relates directly to the PWM control signal.	Adjustable from 0.00 % to 100.00 % Resolution: 0.01 %
P242	**Stabilisation**	The parameter value is used for the states "Second safety time" (SZB) and "Stabilisation B" of the MPA 41xx. It relates directly to the PWM control signal.	Adjustable from 0.00 % to 100.0 % Resolution: 0.01 %
P243	**Post-aeration**	The parameter value is used for the "Post-aeration" state of the MPA 41xx. It relates directly to the PWM control signal.	Adjustable from 0.00 % to 100.0 % Resolution: 0.01 %
P244	**Start value**	If the MPA starts when mains power is switched on, this value is used as the start value. If the MPA changes to one of states from "Follow-up time" to "Safety chain open" and the current speed is 0, the start value is again used as a basis. If the MPA switches to state 1 or 2 (e.g. due to the heat request being cancelled) and the current speed is 0, the start value is again used as a basis. It relates directly to the PWM control signal.	Adjustable from 0.00 % to 100.0 % Resolution: 0.01 %
P245	**Minimum speed**	Minimum speed, controller does not output any smaller value. All parameters for the fan controller must be at or above this limit. It relates directly to the PWM control signal.	Adjustable from 0.00 % to 100.00 % Resolution: 0.01 %
P246	**Maximum speed**	Maximum speed, controller does not output any greater value. All parameters for the fan controller must be at or below this limit. It relates directly to the PWM control signal.	Adjustable from 0.00 % to 100.00 % Resolution: 0.01 %

Parameters			
Parameter description			
Parameters	**Designation**	**Description**	**Setting / Examples**
P247	**Increment for speed changes**	Indicates the value by which the set speed of the fan is incremented or decremented. The calculation is performed 16 times per second. That is, the value of the parameter is added to or subtracted from the current value in a 1/16 s cycle. The increment in the tables is used for certain positions of the inputs, see D+ and D-.	Adjustable from 0.01 % to 100.00 % Resolution: 0.01 % Calculation of time based on the increment Time [in 1/16] = (max [in %] - min [in %]) / increment [in %] Calculation of the increment (content of P247) P247 [in 0.01 %] = ((max [in %] - min [in %]) / (time [in s] * 16)) * 100 Examples: Increment P247 = 40 (= 0.4 % per 1/16 s) requires 12.5 s from min speed = 20 % to max speed 100 %. Longest time from 0 to 100 % at the increment P247 = 1 is 625 s.
P248	**Transition period**	If a time is configured in P248 (P248 > 0), the EM waits in the pre-ventilation position, ignition position and post-ventilation position states. Once the set time has elapsed, the MPA jumps to the next state. If P248=0, the EM waits for the limit switches of the engine that are connected to the HighFire or LowFire inputs of the EM.	P248=0 Wait for limit position switch P248>0 Wait until defined time is over
P249	**Bit functions**	The parameter contains the PWM / analogue switchover, the idle state control for both air pressure detectors LDW low and LDW high, and a ramp function (desired value delay). The output of the correct signal depends on the switch position (centre = voltage output signal, bottom = PWM output signal), which must correspond to the setting of this parameter.	See the following page

The parameter is divided into 16 bits:

Bit 0
Setting 0: PWM output.
Set the slide switch to PWM output (bottom position).

Setting 1: Analogue output.
Set the slide switch to voltage (centre position) or current (top position).
All parameter values in % are now converted to the output of the analogue value.

Example:
"Post-aeration" parameter = 6 000 results in an analogue output of 6 V, etc.

Bit 1
Setting 0: Voltage output active 0-10 V
Setting 1: Current output active 4-20 mA

Bits 2+3:
Setting 0: During standby and faults, PWM = 0
Setting 1: During standby and faults, PWM = power +/-
Setting 2: During standby and faults, PWM = power +/-
Setting 3: Error configuration

Bit 4:
Setting 0: All relay outputs open (WO)
Setting 1: Relay 1 (automatic closed

Bit 5:
Setting 1: High fire input control during pre-aeration time

Bit 6:
Setting 1: Low fire input control during ignition and stabilisation time

Bit 7:
High fire input control during post-aeration time

Bit 8:
Setting 1: High fire relay 3 closed

Bit 9
Bit 10
Bit 11
Bit 12
Bit 13
} 5-bit value

The ramp (desired value delay) for the output signal is active during each change in speed. The "More heat" / "Less heat" inputs take priority if they are active.

Bit 14
Output in % between min. and max. value

Bit 15
Reserved: Setting 0

Calculation as ramp

5-bit value	Duration in s Example if change is from 0 % to 100 %
0	Jump
1	3.125
2	6.250
3	9.375
4	12.5
5	15.625
6	18.75
7	21.875
8	25
9	28.125
10	31.25
11	34.375
12	37.5
13	40.625
14	43.75
15	46.875
16	50
17	53.125
18	56.25
19	59.375
20	62.5
21	65.625
22	68.75
23	71.875
24	75
25	78.125
26	81.25
27	84.375
28	87.5
29	90.625
30	93.75
31	96.875

Formula for ramp calculation:
Duration = | (old desired value - new desired value) | * 5-bit value * 1 s/16

Example:

Change from 0 to 100 %, 5-bit value 31
100 % / 2 % * 31/16 s = 97 s

Manual setting of performance specification , controller stop	
►	**During operation and while waiting for the heat request, it is possible to set the analog signal for the burner performance specification manually.** **The external controller signal is not evaluated during manual setting.** **If a button is not pressed within 15 min., the automatic gas burner control system reverts to the operating display. The external controller signal becomes active again.**

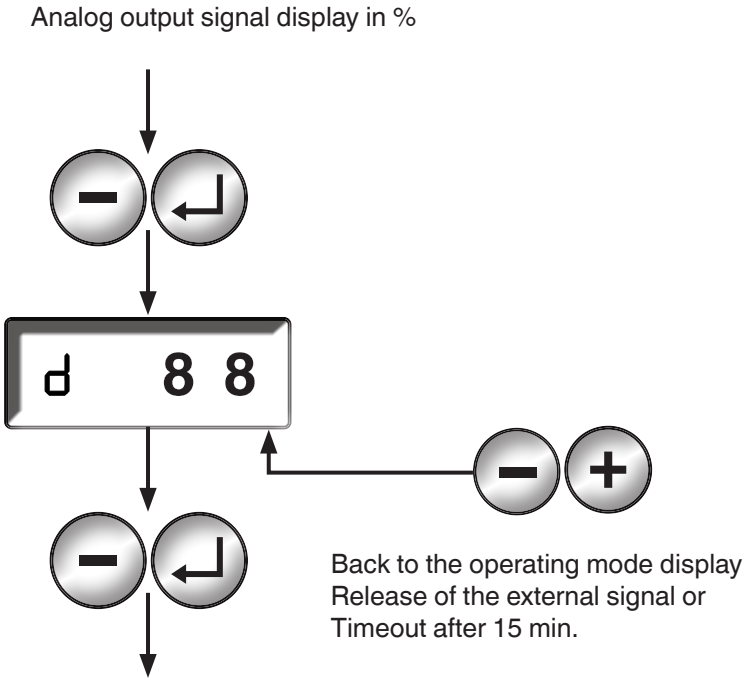

Fieldbus communication EM 2/6 Profibus DP

Profibus setting, termination, technical data for EM 2/4 and EM 2/6 module

Profibus input data from MPA to master

Input data provides information about the state of the MPA. The input data contains a different number of bytes depending on the data transfer module used. The lower bytes are always the same. That is, the Basic transfer is included in the Standard transfer and the Standard transfer is likewise included in the Extended transfer.

Basic transfer 2 bytes
EB0 and EB1

Standard transfer 7 bytes
EB0 to EB6

Extended transfer 15 bytes
EB0 to EB14

Special Extended transfer 25 bytes
EB0 to EB24

Exceptional Extended transfer 34 bytes
EB0 to EB33

Bytes EB0, EB1, EB26 and EM27 contain bit information.
The description of the bits shows the condition when the bit is set to 1.
Some bits are active during a fault (indicated with "X"), others are set to 0.

Basic transfer area			
MPA 41xx			
Bit	**Input byte EB0**	**Description**	**During fault**
0	Flame 1	Signal for flame 1 is present	0
1	Flame 2	Signal for flame 2 is present	X
2	Flame 2 NC	Signal for flame 2 NC is present	X
3	Flame detection	Resulting flame signal detected	X
4	LDW	Sufficient air pressure present	X
5	Input for temperature controller	Signal for "Temperature controller" hardware input	X
6	Valve 1	Gas valve V1 open	X
7	Valve 2	Gas valve V2 open	X
Bit	**Input byte EB1**	**Description**	**During fault**
0	Ignition transformer	Ignition active	X
1	Manual operation	Manual operation active	X
2	Fan	Fan relay on	X
3	Not used		0
4	Temperature controller (HW+BUS)	Evaluation between temperature controller HW input and bus specification	X
5	Not used		0
6	Not used		0
7	Fault	Fault in the automatic gas burner control system	X
Standard transfer area			
Bit	**Input byte EB2**	**Description**	**During fault**
0-7	State number or error code	Current state number or error code in the case of a fault	X
Bit	**Input byte EB3**	**Description**	**During fault**
0-7	Flame quality	Quality of the flame over the ionisation input in 0.1 µA	0
Bit	**Input byte EB4**	**Description**	**During fault**
0	More heat	HW input state	X
1	Less heat	HW input state	X
2	High fire	HW input state	X
3	Low fire	HW input state	X
4	Warning message: More heat and less heat on simultaneously	The inputs for heat + and heat - are active simultaneously	X
5	Not used		0
6	Not used		0
7	Not used		0

Bit	Input byte EB5	Description	During fault
0	Relay matrix output (2 bit) 00 = Off 01 = Relay 1 10 = Relay 2 11 = Relay 3		X
1			X
2	Warning: Low / High fire on simultaneously		X
3	Not used		0
4	Not used		0
5	Not used		0
6	Not used		0
7	Not used		0
Bit	**Input byte EB6**	**Description**	**During fault**
	Degree of modulation in %		
Extended transfer area			
MPA 41xx			
Bit	**Input byte EB7**	**Description**	**During fault**
0-7	Resettable runtime meter	Low byte (byte 0) of the 32-bit runtime meter (Unit: s)	X
Bit	**Input byte EB8**	**Description**	**During fault**
0-7	Resettable runtime meter	Byte 1 of the 32-bit runtime meter (Unit: s)	X
Bit	**Input byte EB9**	**Description**	**During fault**
0-7	Resettable runtime meter	Byte 2 of the 32-bit runtime meter (Unit: s)	X
Bit	**Input byte EB10**	**Description**	**During fault**
0-7	Resettable runtime meter	High byte (byte 3) of the 32-bit runtime meter (Unit: s)	X
Bit	**Input byte EB11**	**Description**	**During fault**
0-7	Resettable start counter	Low byte (byte 0) of the 32-bit start counter	X
Bit	**Input byte EB12**	**Description**	**During fault**
0-7	Resettable start counter	Byte 1 of the 32-bit start counter	X
Bit	**Input byte EB13**	**Description**	**During fault**
0-7	Resettable start counter	Byte 2 of the 32-bit start counter	X
Bit	**Input byte EB14**	**Description**	**During fault**
0-7	Resettable start counter	High byte (byte 3) of the 32-bit start counter	X

Special Extended transfer area			
MPA 41xx			
Bit	**Input byte EB15**	**Description**	**During fault**
0-7	Switching cycles counter V2	Low byte (byte 0) of the 32-bit switching cycle counter V2	X
Bit	**Input byte EB16**	**Description**	**During fault**
0-7	Switching cycles counter V2	Byte 1 of the 32-bit switching cycle counter V2	X
Bit	**Input byte EB17**	**Description**	**During fault**
0-7	Switching cycles counter V2	Byte 2 of the 32-bit switching cycle counter V2	X
Bit	**Input byte EB18**	**Description**	**During fault**
0-7	Switching cycles counter V2	High byte (byte 3) of the 32-bit switching cycle counter V2	X
Bit	**Input byte EB19**	**Description**	**During fault**
0-7	Runtime meter V2	Low byte (byte 0) of the 32-bit runtime meter V2 (Unit: s)	X
Bit	**Input byte EB20**	**Description**	**During fault**
0-7	Runtime meter V2	Byte 1 of the 32-bit runtime meter V2 (Unit: s)	X
Bit	**Input byte EB21**	**Description**	**During fault**
0-7	Runtime meter V2	Byte 2 of the 32-bit runtime meter V2 (Unit: s)	X
Bit	**Input byte EB22**	**Description**	**During fault**
0-7	Runtime meter V2	High byte (byte 3) of the 32-bit runtime meter V2 (Unit: s)	X
Bit	**Input byte EB23**	**Description**	**During fault**
0-7	Additional error information 1	First additional error information byte	X
Bit	**Input byte EB24**	**Description**	**During fault**
0-7	Additional error information 4	First additional error information byte	X
Bit	**Input byte EB25**	**Description**	**During fault**
0-7	Error state number	State number in which the error occurred	X
Bit	**Input byte EB26**	**Description**	**During fault**
0	GDW min. / gas pressure min.	Input function GDW min. of HW input	X
1	POC V1	Input function POC V1 of HW input	
2	POC V2	Input function POC V2 of HW input	
3	Start release	Input function for start release of HW input	
4	V2 stepwise on	Input function V2 stepwise of HW input	
5	Main burner on	Input function for heat request of HW input	
6	X14 on	Air purge / flexible output function of HW input	
7	X8 cooling on	Input function for cooling of HW input	
Bit	**Input byte EB27**	**Description**	**During fault**
0	Error information for LDW cooling	Incorrect LDW position during cooling with X8	X
1	Output X11	Operating output position on/off	0
2	Warning of high internal temperature	Warning: High internal temperature in MPA housing (> 82 °C)	X
3	Input LDW2	Input function LDW2 of HW input	X
4	Not used	Not used	0
5	Not used	Not used	0
6	Not used	Not used	0
7	Not used	Not used	0
Bit	**Input byte EB28**	**Description**	**During fault**
0-7	Internal temperature of MPA	Internal temperature of MPA housing in °C; an offset of 50 must be deducted	X

Bit	Input byte EB29-32	Description	During fault
0-7	Switching cycles counter X8	Switching cycles for fan / air valve output X8	X
Bit	**Input byte EB33**	**Description**	**During fault**
0-7	Not used	Not used	0

Output data from master to EM 2/6

Byte 0	
Bit	Output byte AB0
0	Heat request
1	V2 stepwise / air purge
2	Remote unlocking
3	Output X11 (P19 = 8)
4	Cooling (for X8) on
5	Main burner on
6	Start release
7	Not used

Byte 1	
0	Activate control bit bus inputs for more / less heat
1	More heat
2	Less heat
3	Activate control bit bus input for absolute value in additional byte 2
4	Not used
5	Not used
6	Not used
7	Not used

Byte 2	
0	Specification for speed (in 0.5 %) during operation if control bit is set

Transfer areas:
A: No bytes

B: 1 byte

C: 3 bytes

Fieldbus communication
Modbus
For details of the Modbus setting, termination and technical data, see the EM 2/4 module

Modbus input data
The information can be read using the following function codes:
03 (0x03) Read Holding Registers
01 (0x01) Read Coils

Basic transfer area

Bit	Register address 0	Description	During fault
0	Flame 1	Signal for flame 1 is present	0
1	Flame 2	Signal for flame 2 is present	X
2	Flame 2 NC	Signal for flame 2 NC is present	X
3	flame detection	Resulting flame signal detected	X
4	LDW 1	Signal status of air pressure monitor LDW1	X
5	Input for temperature controller	Signal for "Temperature controller" hardware input	X
6	Valve 1	Gas valve V1 open	X
7	Valve 2	Gas valve V2 open	X
8–15	Not used	Not used	0
Bit	**Register address 1**	**Description**	**During fault**
0	Ignition transformer	Ignition active	X
1	Manual operation	Manual operation active	X
2	Fan	Fan relay on	X
3	Not used		0
4	Temperature controller (HW + bus)	Heat request signal depending on parameter P17	X
5	Not used		0
6	Not used		0
7	Fault	Fault in the automatic gas burner control system	X
8-15	Not used	Not used	0

Standard transfer area

Bit	Register address 2	Description	During fault
0-7	State number or error code	Current state number OR error code in the case of a fault	X
8-15	Not used	Not used	0

Standard transfer area

Bit	Register address 3	Description	During fault
0-7	Flame quality	Quality of the flame over the ionisation input in 0.1 µA	0
8-15	Not used	Not used	0

Bit	Register address 4	Description	During fault
0	More heat	HW input state	X
1	Less heat	HW input state	X
2	High fire	HW input state	X
3	Low fire	HW input state	X
4	Warning message: More heat / less heat on simultaneously		X
5	Not used		0
6	Not used		0
7	Not used		0
8-15	Not used		0

Bit	Register address 5	Description	During fault
0	0-1 or 8-9: Output state switch modulation (2 bit): 0 = Off, 01 = Relay 1, 10 = Relay 2, 11 = Relay 3		X
1			X
2	Warning: Low fire / high fire on simultaneously		X
3	Not used		0
4	Not used		0
5	Not used		0
6	Not used		0
7	Not used		0
8-15	Not used		0

Bit	Register address 6	Description	During fault
0-15	Degree of modulation in %		X

Extended transfer area

Bit	Register address 7	Description	During fault
0-7	Resettable runtime meter	Low byte (byte 0) of the 32-bit runtime meter (in s)	X
8-15	Not used	Not used	0
Bit	**Register address 8**	**Description**	**During fault**
0-7	Resettable runtime meter	Byte 1 of the 32-bit runtime meter (in s)	X
8-15	Not used	Not used	0
Bit	**Register address 9**	**Description**	**During fault**
0-7	Resettable runtime meter	Byte 2 of the 32-bit runtime meter (in s)	X
8-15	Not used	Not used	0
Bit	**Register address 10**	**Description**	**During fault**
0-7	Resettable runtime meter	High byte (byte 3) of the 32-bit runtime meter (in s)	X
8-15	Not used	Not used	0

Bit	Register address 11	Description	During fault
0-7	Resettable start counter	Low byte (byte 0) of the 32-bit start counter	X
8-15	Not used	Not used	0

Bit	Register address 12	Description	During fault
0-7	Resettable start counter	Byte 1 of the 32-bit start counter	X
8-15	Not used	Not used	0

Bit	Register address 13	Description	During fault
0-7	Resettable start counter	Byte 2 of the 32-bit start counter	X
8-15	Not used	Not used	0

Bit	Register address 14	Description	During fault
0-7	Resettable start counter	High byte (byte 3) of the 32-bit start counter	X
8-15	Not used	Not used	0

Extended transfer area

Bit	Register address 15	Description	During fault
0-7	Switching cycles counter V2	Low byte (byte 0) of the 32-bit switching cycle counter V2	X
8-15	Not used	Not used	0

Bit	Register address 16	Description	During fault
0-7	Switching cycles counter V2	Byte 1 of the 32-bit switching cycle counter V2	X
8-15	Not used	Not used	0

Bit	Register address 17	Description	During fault
0-7	Switching cycles counter V2	Byte 2 of the 32-bit switching cycle counter V2	X
8-15	Not used	Not used	0

Bit	Register address 18	Description	During fault
0-7	Switching cycles counter V2	High byte (byte 3) of the 32-bit switching cycle counter V2	X
8-15	Not used	Not used	0

Bit	Register address 19	Description	During fault
0-7	Runtime meter V2	Low byte (byte 0) of the 32-bit runtime meter V2 (in s)	X
8-15	Not used	Not used	0

Bit	Register address 20	Description	During fault
0-7	Runtime meter V2	Byte 1 of the 32-bit runtime meter V2 (in s)	X
8-15	Not used	Not used	0

Bit	Register address 21	Description	During fault
0-7	Runtime meter V2	Byte 2 of the 32-bit runtime meter V2 (in s)	X
8-15	Not used	Not used	0

Bit	Register address 22	Description	During fault
0-7	Runtime meter V2	High byte (byte 3) of the 32-bit runtime meter V2 (in s)	X
8-15	Not used	Not used	0

Bit	Register address 23	Description	During fault
0-7	Additional error information 1	First additional error information byte	X
8-15	Not used	Not used	0

Bit	Register address 24	Description	During fault
0-7	Additional error information 4	Fourth additional error information byte	X
8-15	Not used	Not used	0

The following section collates the information required for complete use of the 16-bit register.
This query can be used if the bus load needs to be minimized.

Bit	Register address 25	Description	During fault
0	Flame 1	Signal for flame 1 is present	0
1	Flame 2	Signal for flame 2 is present	X
2	Flame 2 NC	Signal for flame 2 NC is present	X
3	Flame detection	Resulting flame signal detected	X
4	LDW	Sufficient air pressure present	X
5	Input for temperature controller	Signal for "Temperature controller" hardware input	X
6	Valve 1	Gas valve V1 open	X
7	Valve 2	Gas valve V2 open	X
8	Ignition transformer	Ignition active	X
9	Manual operation	Manual operation active	X
10	Fan	Fan relay on	X
11	Not used		0
12	Temperature controller (HW + bus)	Evaluation between HW input for temperature controller and bus specification	X
13	Not used		0
14	Not used		0
15	Fault	Fault in the automatic gas burner control system	X

Bit	Register address 26	Description	During fault
0-7	State number or error code	Current state number OR error code in the case of a fault	X
8-15	Flame quality	Quality of the flame over the ionisation input in 0.1 µA	0

Bit	Register address 27	Description	During fault
0	Heat plus	HW input state	X
1	Heat plus	HW input state	X
2	High fire	HW input state	X
3	Low fire	HW input state	X
4	Warning message: Power plus and minus on simultaneously		X
5	Not used		X
6	Not used		X
7	Not used		X
8-9	Output state switch modulation (2 bit): 0 = Off, 01 = Relay 1, 10 = Relay 2, 11 = Relay 3		X
10	Warning message: Low and high fire on simultaneously		X
11	Not used		0
12	Not used		0
13	Not used		0
14	Not used		0
15	Not used		0
Bit	**Register address 28**	**Description**	**During fault**
0-15	Degree of modulation in %		X

Bit	Register address 29	Description	During fault
0-7	Resettable runtime meter	Low byte (byte 0) of the 32-bit runtime meter (in s)	X
8-15	Resettable runtime meter	Byte 1 of the 32-bit runtime meter (in s)	X

Bit	Register address 30	Description	During fault
0-7	Resettable runtime meter	Byte 2 of the 32-bit runtime meter (in s)	X
8-15	Resettable runtime meter	High byte (byte 3) of the 32-bit runtime meter (in s)	X

Bit	Register address 31	Description	During fault
0-7	Resettable start counter	Low byte (byte 0) of the 32-bit start counter	X
8-15	Resettable start counter	Byte 1 of the 32-bit start counter	X

Bit	Register address 32	Description	During fault
0-7	Resettable start counter	Byte 2 of the 32-bit start counter	X
8-15	Resettable start counter	Byte 3 of the 32-bit start counter	X

Bit	Register address 33	Description	During fault
0-7	Switching cycles counter V2	Low byte (byte 0) of the 32-bit switching cycle counter V2	X
8-15	Switching cycles counter V2	Byte 1 of the 32-bit switching cycle counter V2	X

Bit	Register address 34	Description	During fault
0-7	Switching cycles counter V2	Byte 2 of the 32-bit switching cycle counter V2	X
8-15	Switching cycles counter V2	High byte (byte 3) of the 32-bit switching cycle counter V2	X

Bit	Register address 35	Description	During fault
0-7	Runtime meter V2	Low byte (byte 0) of the 32-bit runtime meter V2 (in s)	X
8-15	Runtime meter V2	Byte 1 of the 32-bit runtime meter V2 (in s)	X

Bit	Register address 36	Description	During fault
0-7	Runtime meter V2	Byte 2 of the 32-bit runtime meter V2 (in s)	X
8-15	Runtime meter V2	High byte (byte 3) of the 32-bit runtime meter V2 (in s)	X

Bit	Register address 37	Description	During fault
0-7	Additional error information 1	First additional error information byte	X
8-15	Additional error information 4	Fourth additional error information byte	X

Bit	Register address 38	Description	During fault
0-7	Low byte: LSByte of the u24 article number SW P1		X
8-15	High byte: u24 article number SW P1		X

Bit	Register address 39	Description	During fault
0-7	Low byte: MSByte of the u24 article number SW P1		X
8-15	High byte: Index article number SW P1		X

Bit	Register address 40	Description	During fault
0-7	Low byte: Production day for the MPA		X
8-15	High byte: Production month for the MPA		X

Bit	Register address 41	Description	During fault
0-7	Low byte: Production year for the MPA		X
8-15	High byte: Unassigned		X

Bit	Register address 42	Description	During fault
0-7	Low byte: LSByte of the u32 device number for the MPA		X
8-15	High byte: u32 device number for the MPA		X

Bit	Register address 43	Description	During fault
0-7	Low byte: u32 device number for the MPA		X
8-15	High byte: MSByte of the u32 device number for the MPA		X

Bit	Register address 44	Description	During fault
0-7	Low byte: LSByte of the u24 article number for HW		X
8-15	High byte: u24 article number for HW		X

Bit	Register address 45	Description	During fault
0-7	Low byte: MSByte of the u24 article number for HW		X
8-15	High byte: Index article number for HW		X

Bit	Register address 46	Description	During Fault
0-7	Low byte: LSByte of the u24 article number for the device		X
8-15	High byte: u24 article number for the device		X

Bit	Register address 47	Description	During fault
0-7	Low byte: MSByte of the u24 article number for the device		X
8-15	High byte: Index article number for the device		X

Bit	Register address 48	Description	During fault
0-7	Low byte: LSByte of the u24 article number for EM SW		X
8-15	High byte: u24 article number for EM SW		X

Bit	Register address 49	Description	During fault
0-7	Low byte: MSByte of the u24 article number for EM SW		X
8-15	High byte: Index article number for EM SW		X

Bit	Register address 50	Description	During fault
0-7	Low byte: Production day of EM		X
8-15	High byte: Production month of EM		X

Bit	Register address 51	Description	During fault
0-7	Low byte: Production year of EM		X
8-15	High byte: Unassigned		X

Bit	Register address 52	Description	During fault
0-7	Low byte: LSByte of the u32 device number for the EM		X
8-15	High byte: u32 device number for the EM		X

Bit	Register address 53	Description	During fault
0-7	Low byte: u32 device number for the EM		X
8-15	High byte: MSByte of the u32 device number for the EM		0

Bit	Register address 54	Description	During fault
0-7	Low byte: LSByte of the u24 article number for the EM HW		X
8-15	High byte: u24 article number for the EM HW		X

Bit	Register address 55	Description	During fault
0-7	Low byte: MSByte of the u24 article number for the EM HW		X
8-15	High byte: Index article number for the EM HW		X

Bit	Register address 56	Description	During fault
0-7	Low byte: LSByte of the u24 article number for the EM device		X
8-15	High byte: u24 article number for the EM device		X

Bit	Register address 57	Description	During fault
0-7	Low byte: MSByte of the u24 article number for the EM device		X
8-15	High byte: Index article number for the EM device		X

Bit	Register address 58	Description	During fault
0-7	Error state	State in which the error was triggered	X
8-15	Not used		0

Bit	Register address 59	Description	During fault
0	Gas pressure detector (GDW) min.	Input function GDW min. of HW input	X
1	POC V1	Input function POC V1 of HW input	X
2	POC V2	Input function POC V2 of HW input	X
3	Start release	Input function for start release of HW input	X
4	V2 stepwise on	Input function V2 stepwise of HW input	X
5	Main burner on	Input function for heat request of HW input	X
6	Air purge / flexible output function for X14 on	Input function for air purge / flexible output function of HW input	X
7	Cooling X8 on	Input function for cooling of HW input	X
8	Error information for LDW cooling	Information: Incorrect LDW position during cooling with X8	
9	Output X11	State of output X11 (on/off)	0
10	Warning of high internal temperature	Warning: High temperature in MPA housing (> 82 °C)	X
11	Input LDW	Input function LDW2 of HW input	X
12	Error information for LDW air purge	Information: Incorrect LDW position during air purge with X14	X
13	Not used	Not used	0
14	Not used	Not used	0
15	Not used	Not used	0

Bit	Register address 60	Description	During fault
0-7	Internal temperature of MPA	Internal temperature of MPA housing in °C; an offset of 50 must be deducted.	X
8-15	Not used		0

Bit	Register address 61	Description	During fault
0-7	Switching cycles counter X8	Low byte (byte 0) of the 32-bit switching cycle counter X8 (fan / air valve)	X
8-15	Switching cycles counter X8	Byte 1 of the 32-bit switching cycle counter X8	X

Bit	Register address 62	Description	During fault
0-7	Switching cycles counter X8	Byte 2 of the 32-bit switching cycle counter X8	X
8-15	Switching cycles counter X8	High byte (byte 3) of the 32-bit switching cycle counter X8	X

Bit	Register address 63	Description	During fault
0-7	Not used		X
8-15	Not used		X

Output data EM 2/6
These specifications can be written using the following function codes.

05 (0x05) Write Single Coil
(Coil = bit at bit address x)
06 (0x06) Write Single Register
(to register address)
16 (0x10) Write Multiple Registers
(from register address)

Digital inputs
This information can be read using the following function codes.
04 (x04) Read Input Registers
02 (0x02) Read Discrete Inputs
This information is included in the input data (see above).

Bit	Register address 0
0	Heat request
1	V2 stepwise / air purge Flexible output function for X14 on
2	Remote unlocking
3	Output X11 (P19 = 8)
4	Cooling for X8 on
5	Main burner on
6	Start release
7	Not used
8	Activate control of power +/- via bus
9	Power +
10	Power -
11	Control of absolute value in register 1 on
12	Not used
13	Not used
14	Not used
15	Not used

Bit	Register address 1
0-15	Specification of absolute value (in 0.5 %) during operation if control bit is set

For a description of the bit function, see the EM 2/4 chapter.

Bit	Register address 0
0	HW input state more heat
1	HW input state less heat
2	HW input state high fire
3	HW input state low fire
4	Not used
5	Not used
6	Not used
7	Not used
8	Bits 8-15: Not used

Flame detector device

Requirements for the operation of separate flame detector devices on the MPA 41xx:

The flame detector devices must have been tested and approved for the monitoring of gas burners.

The response times must be observed.

Total response time = MPA response time + flame detector device response time.
Proof of compliance with the requirements of EN 298 must be provided.

The response time to a flame failure by an external flame detector device must not be longer than the first or second safety time during start-up.
When connected to FLW 1, the ionisation behaviour of the flame must be simulated (rectifier effect). The following values are present at the ionisation input / output of the MPA:
230 VAC +10 %-15 %.
The internal resistance of the MPA is approx. 1 MΩ. For safety reasons, the flame sensor must also function properly with an internal resistance of 360 kΩ. Under these conditions, the simulation circuit in the flame detector device must reach at least a direct current of 3 µA.
If an alternating current with a DC component is simulated, a DC component must not fall below 25 %.
The current can be diverted to N, PE, or returned to N on the MPA.
When connected to FLW 2, the switching output of a suitable flame detector device must be connected to FLW 2_NO (115 VAC or 230 VAC). For continuous operation, FLW 2_NC must also be connected (EXOR signal). The selected flame detector device must also be certified for continuous operation. Alternatively, a flame detector device for intermittent operation (FLW 2_NO only) may be used in combination with the DUNGS shutter in continuous operation.
The EMC regulations must be observed (EN 298). The overall system must not produce inadmissible emissions.
The MPA41xx is not galvanically isolated.
The MPA 41xx and flame monitor must be connected in the correct phase.

Attention

DUNGS cannot be held liable if the flame detector device and automatic burner control system do not function correctly together. This applies in particular to electromagnetic behaviour that does not conform to standards and to incorrect timing.

For flame detector device 1, the quality of the flame signal is displayed as a number between 0 and 15 µA. Evaluation of the flame signal is possible only when using ionisation flame monitoring or monitoring via UV 41 (HE).
When using the UV42, FLW 10 IR or FLW 20 UV, the system always displays the maximum value.

Flame detector devices approved by DUNGS:

Manufacturer	Designation	Type	Output signal	Safety time flame detector device	Total response time to flame failure	Intermittent	Continuous operation
–	Ionisation electrode	Ionisation	Ionisation	0 s	P41	Yes	Yes
DUNGS	UV41 (HE)	UV tube	Ionisation	0.125 s (= 2/16 s)	P41 + 0.125 s	Yes	Continuous operation only in conjunction with DUNGS shutter function
DUNGS	UV42	UV tube	Switching output 230 VAC	0.125 s (= 2/16 s)	P42 + 0.125 s	Yes	Continuous operation only in conjunction with DUNGS shutter function
DUNGS	FLW 20 (KLC 1000) KLC 10 / 230 KLC 1000 / 230* FLW 20UV** KLC 10 / 230 RA KLC 1000 / 230 RA* FLW 20UV / F V1.0**	UV tube	Ionisation	0.5 s	P41 + 0.5 s	Yes	No
DUNGS	KLC 2002 FLW 10 IR** KLC 2002 FLW 10IR V2.1** KLC 20 / 230	Flicker detector with frequency analysis	Ionisation	0.5 s	P41 + 0.5 s	Yes	No
DUNGS	FLW 41I	Ionisation	Switching output 230 VAC	0.19 s (= 3/16 s)	P42 + 0.19 s	Yes	Continuous operation only in conjunction with DUNGS shutter signal (e.g. EM 2/4)

* Alternative designation by BST Solutions
** Alternative designation by DUNGS

Flame detectors that are not included in this list must be approved by DUNGS prior to use.

UV 41 (HE)

The UV 41 (HE) is a flame detector device with UV tube. It is made of metal to withstand high mechanical stresses.
The flame detector is connected to the ionisation input of the MPA 41xx and is suitable for intermittent operation.
The UV 4x shutter is additionally required for use in continuous operation applications.
A UV4x-EM 1/x adapter must be used to mount the UV 41 (HE).



Technical data

General information for UV 41	
Rated voltage	230 VAC -15 % to +10 %
Frequency	50-60 Hz
Power consumption	< 1 W
Protection class	IP 54
Ambient temperature	-40 °C to +60 °C -40 °C to +80 °C with reduced lifetime of the UV tube
Storage and transport	-40 °C to +80 °C
Humidity	DIN 60730-1, no dewing admissible
Service life	10 000 operating hours (version (HE) has reduced service life)
Installation position	Any
Dimensions in mm	Diameter: 44.5 mm Length: 94 mm Length with UV4x-EM 1: Approx. 128-143 mm
Max. line length	10 m

Dimensions

UV 41 (HE)

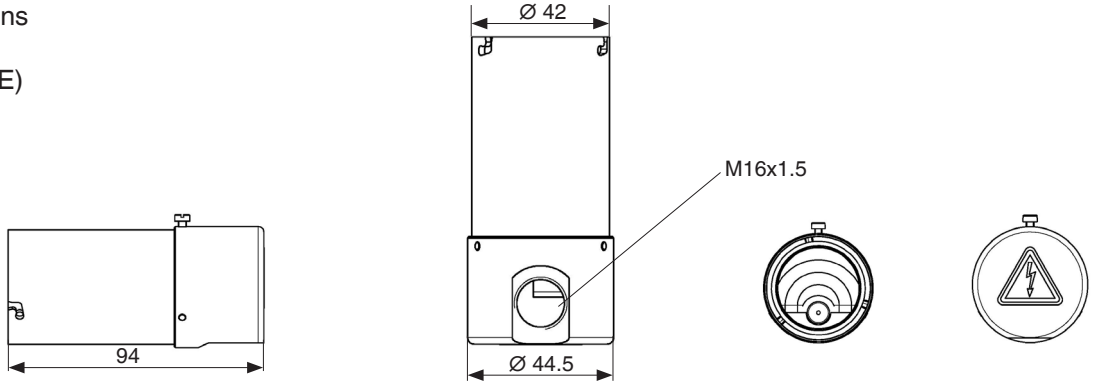

UV 4x EM 1/x adapter

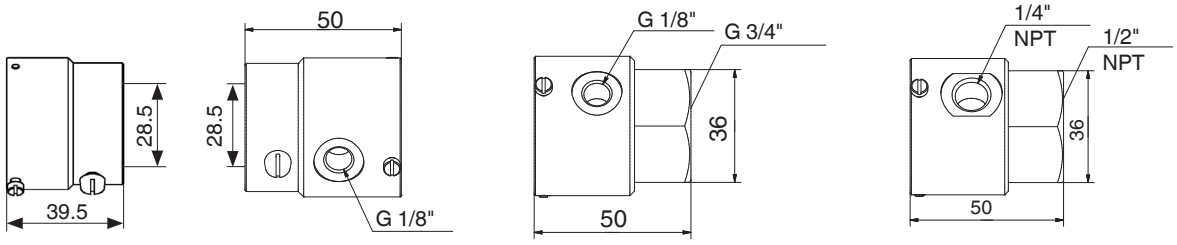

EM 1/3

EM 1/4
EM 1/6

EM 1/5
EM 1/7

EM 1/8
EM 1/9

MC • Edition 2025.03 • No. 300 967

Installation
The UV 41 (HE) must be installed as close as possible to the flame to be monitored.
The UV 41 (HE) EM 1/3 adapter fits a 1" inspection tube. During installation, make sure that the rubber sealing ring supplied with the UV 41 (HE) is inserted between the UV 41 (HE) and the mounting adapter.
The UV sensor also reports external light as a flame. The UV 41 (HE) must therefore be mounted such that, for example, no daylight, ignition sparks or other UV sources can be detected.
Since the UV 41 (HE) tube is sensitive to impacts, vibrations, etc., it must be installed in a way that minimises vibration.
After the installation work is complete, all screws must be checked for tight fit.
If temperatures in excess of 60 °C are reached at the UV 41 (HE), an adapter fitted with a quartz cover glass and, if necessary, an additional purging air connection must be used (available upon request).

Attention
The maximum permitted line lengths must not be exceeded. Supply and signal lines must be laid separately, to the extent possible.

Attention
The flame detector device UV 41 (HE) is delivered without a cable screw connection.
To guarantee the required strain relief and IP protection class IP 54, a cable screw connection M16x1.5 for cable diameters 5-9 mm is required (3 x 0.75 mm^2, corresponding to AWG 20, up to 3 x 1.5 mm^2, corresponding to AWG 16).
The protective earth conductor must be connected using an insulated female connector according to DIN 46245.

Nomenclature of mounting adapter UV4x

UV4x-EM 1/x: AA / QG / BB
UV4x-EM 1/x: Adapter for UV41, UV42
UV4x-EM AA: Diameter in mm or connection thread
UV4x-EM QG: Quartz glass for heat protection
UV4x-EM BB: Connection thread for purge air connection

Electrical connection

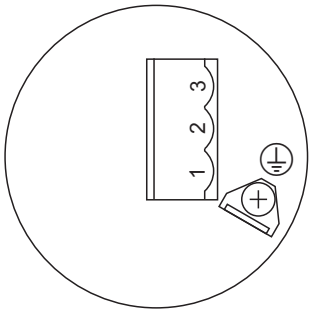

Connection	UV 41 (HE)	MPA 41xx
Pin 1	Out	Ionisation (5)
Pin 2	N	N
Pin 3	L	Vers. FLW (7)
PE	⏚	⏚

UV 42

The UV 42 is a flame detector device with UV tube. It is made of metal to withstand high mechanical stresses. The flame detector is connected to the switch input of the MPA 41xx (flame detector device 2) and is suitable for intermittent operation.
The UV 4x shutter is additionally required for use in continuous operation applications.
A UV4x-EM 1/x adapter must be used to mount the UV 42.



Technical data

General information for UV 42	
Rated voltage	230 VAC -15 % to +10 %
Frequency	50-60 Hz
Power consumption	< 1 W
Protection class	IP 54
Ambient temperature	-20 °C to +60 °C -40 °C to +80 °C with reduced lifetime of the UV tube
Storage and transport	-40 °C to +80 °C
Humidity	DIN 60730-1, no dewing admissible
Service life	10 000 operating hours
Installation position	Any
Dimensions in mm	Diameter: 44.5 mm Length: 94 mm Length with UV4x-EM 1: Approx. 128-143 mm
Max. line length	100 m

Dimensions

UV 42

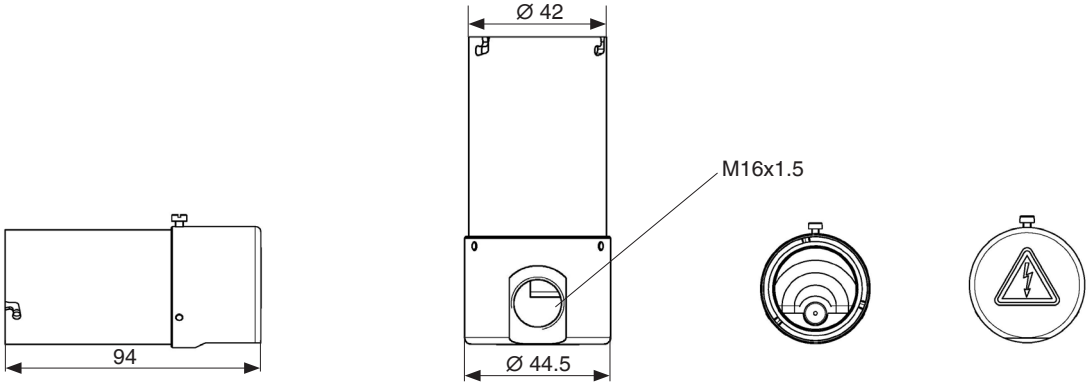

UV 4x EM 1/x adapter

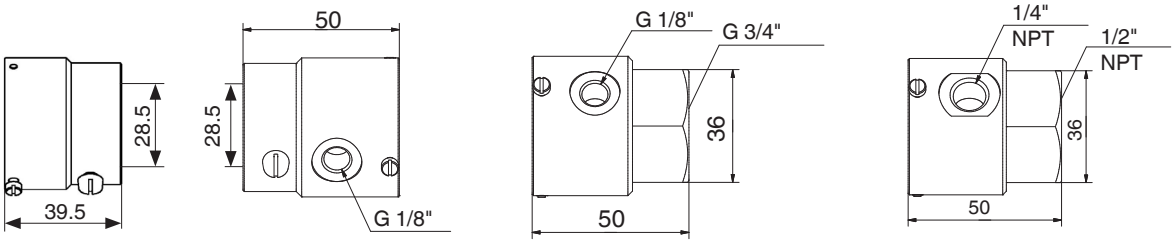

EM 1/3

EM 1/4
EM 1/6

EM 1/5
EM 1/7

EM 1/8
EM 1/9

Installation
The UV 42 must be installed as close as possible to the flame to be monitored.
The UV 42 EM 1/3 adapter fits a 1" inspection tube. During installation, make sure that the rubber sealing ring supplied with the UV 42 is inserted between the UV 42 and the mounting adapter.
The UV sensor also reports external light as a flame. The UV 42 must therefore be mounted such that, for example, no daylight, ignition sparks or other UV sources can be detected.
Since the UV tube is sensitive to impacts, vibrations, etc., it must be installed in a way that minimises vibration.
After the installation work is complete, all screws must be checked for tight fit.
If temperatures in excess of 60 °C are reached at the UV 42, an adapter fitted with a quartz cover glass and, if necessary, an additional purging air connection must be used (available upon request).

Attention
Even when the shutter is closed, infrared light can still fall upon the UV cell.
This may lead to safety shutdowns, despite the UV cell functioning correctly.
In this case, the position of the flame detector device must be changed or a mounting adapter with a smaller diameter must be used.
Alternatively, the diameter can also be made smaller using a reducing adapter.

Attention
The maximum permitted line lengths must not be exceeded. Supply and signal lines must be laid separately, to the extent possible.

Attention
The flame detector device UV 42 is delivered without a cable screw connection.
To guarantee the required strain relief and IP protection class IP 54, a cable screw connection M16x1.5 for cable diameters 5-9 mm is required (3 x 0.75 mm^2, corresponding to AWG 20, up to 3 x 1.5 mm^2, corresponding to AWG 16).
The protective earth conductor must be connected using an insulated female connector according to DIN 46245.

Nomenclature of mounting adapter UV4x

UV4x-EM 1/x:	AA / QG / BB
UV4x-EM 1/x:	Adapter for UV41, UV42
UV4x-EM AA:	Diameter in mm or connection thread
UV4x-EM QG:	Quartz glass for heat protection
UV4x-EM BB:	Connection thread for purge air connection

Electrical connection

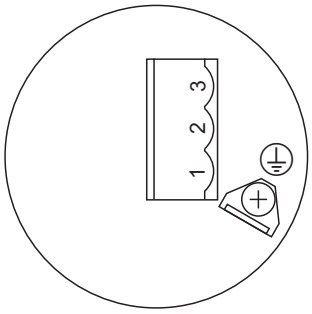

Connection	UV 42	MPA 41xx
Pin 1	Out	FLW 2 NO (16)
Pin 2	N	N
Pin 3	L	Vers. FLW (7)
PE	⏚	⏚

UV 4x EM 1/1 (shutter module)
The UV 4x shutter module enables continuous operation of the UV 41 and UV 42 flame detector devices. The shutter module is inserted between the flame detector device and the corresponding mounting adapter. A separate power supply is not necessary as only the shutter signal provided by the MPA 41xx via an extension module (e.g. EM 2/4) must be connected.



Technical data

General information for UV 4x EM 1/1 (shutter module)	
Safety extra-low voltage	24 VDC
Protection class	IP 54
Ambient temperature	-20 °C to +60 °C -40 °C to +80 °C (with reduced lifetime)
Storage and transport	-40 °C to +80 °C
Humidity	DIN 60730-1, non-condensing
Service life	1 million switching operations (at 10 min / switch, 20 a)
Installation position	Any
Dimensions in mm	Diameter: 44.5 mm Length: 75 mm Height: Approx. 101 mm
Max. line length	100 m

Dimensions
UV 4x EM 1/1

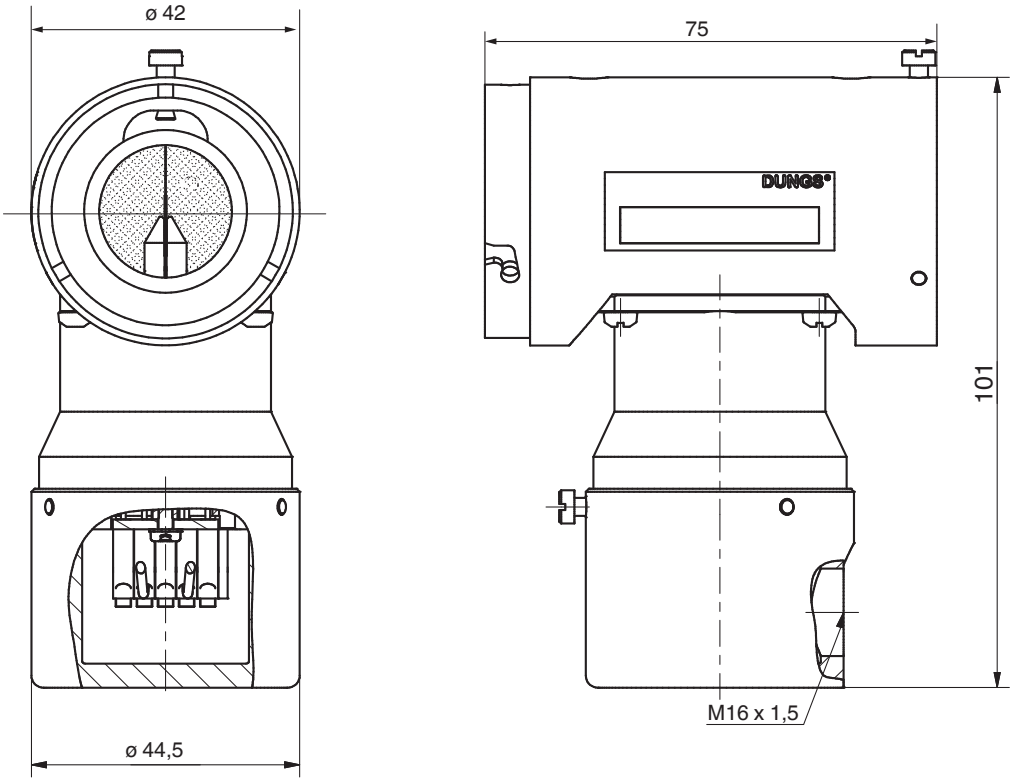

Attention
The maximum permitted line lengths must not be exceeded. Supply and signal lines must be laid separately, to the extent possible.

Attention
The shutter module is delivered without cable screw connection.
To guarantee the required strain relief and IP protection class IP 54, a cable screw connection M16x1.5 for cable diameters 5-9 mm is required (3 x 0.75 mm^2, corresponding to AWG 20, up to 3 x 1.5 mm^2, corresponding to AWG 16).

The shutter module is mounted between the UV 41 (HE) or UV 42 flame detector device and the mounting adapter UV 4x EM 1/x.



Electrical connection

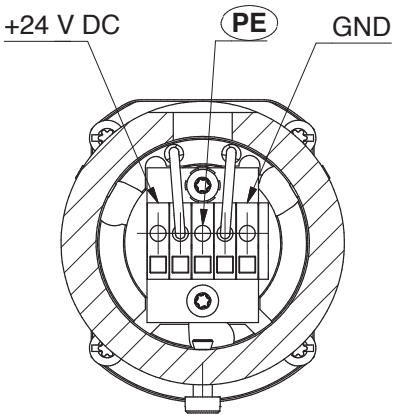

Connection	UV 4x EM 1 / 1	MPA 41xx EM 2 / x
Pin 1	+24 VDC	+24 VDC
Pin 2	⏚	
Pin 3	GND	GND

FLW 20 / FLW 20UV /
FLW 20UV / F V1.0

The FLW 20UVx is a flame detector with UV tube in a plastic design.
The use of a UV tube guarantees that background radiation (for example from hot refractory linings or parts of the mixing device) is not detected.
The flame signal intensity can be viewed directly using the optical LED display of the flame detector device.
The FLW 20UVx is connected to the ionisation input of the MPA 41xx and is suitable only for intermittent operation.
The FLW flanges are suitable for mounting.



Technical data	
Rated voltage	230 VAC -15 % to +10 %
Frequency	50-60 Hz
Current consumption	5.5 mA
Output data	Typical response time with flame on: 0.5 sec. Response time to flame failure < 0.5 sec.
Switching output	Max. switching current 15 mA Max. switching power 0.3 W Max. switching voltage 280 V AC / 400 V DC
Optical evaluation	Spectral range 185-260 nm Tolerated flame signal drops: approx. 200 ms
Alignment to flame	Radial, left
Protection class	IP 41
Ambient temperature	-20 °C to +50 °C -20 °C to +60 °C with reduced lifetime
Storage and transport	-20 °C to +60 °C
Humidity	Max 95 % RH, no dewing permitted
Service life	10 000 operating hours
Installation position	Any
Max. line length	10 m

Dimensions [mm]
FLW 20 UV

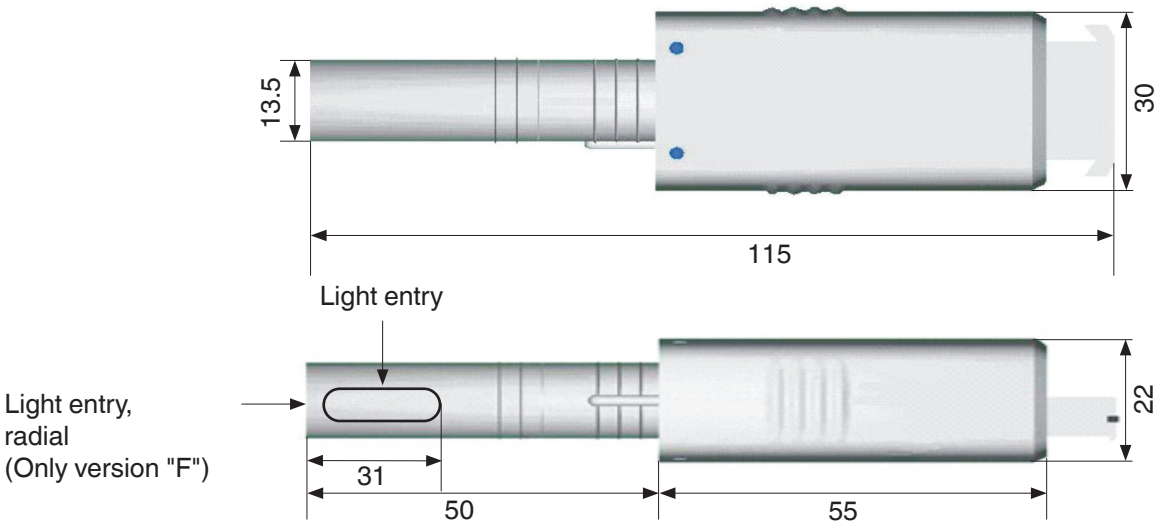

FLW flange

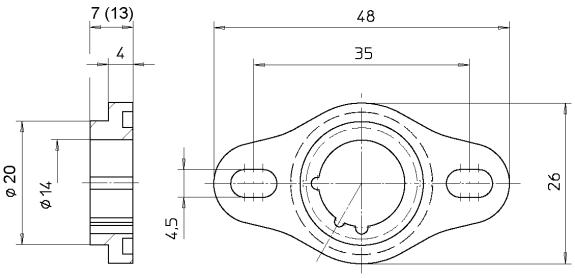

Installation

The FLW 20UVx must be installed as close as possible to the flame to be monitored.
It is installed using an FLW flange (height 7 or 13 mm) or a mount with a 14 mm installation aperture.
The flame detector device must be firmly inserted into the mount. No external light is permitted to fall on the sensor, and a direct line of sight to the ignition spark must also be avoided.

Attention: The maximum permitted line lengths must not be exceeded. Supply and signal lines must be laid separately, to the extent possible.

Electrical connection

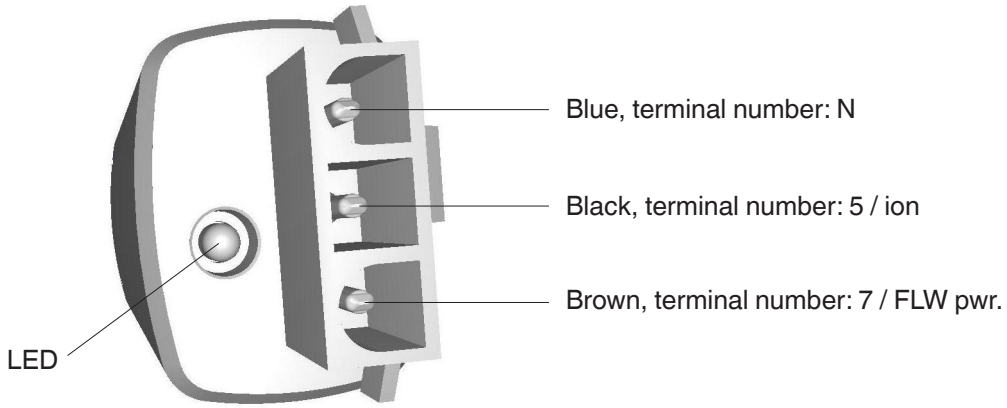

Operating display LED

The flame signal intensity recorded by the FLW 20 UV flame detector device is shown using the built-in LED.

LED off
FLW is de-energised or no flame is detected

LED flashes
Flame detected; the number of flashing pulses of the LED indicates the flame signal intensity: increasing flashing pulses = higher intensity

LED permanently on
Flame detected at the highest flame intensity

Commissioning and maintenance

Since the UV tubes are subject to ageing, a technical safety check of the flame detector device must be carried out during commissioning and during each maintenance activity. The following functions must be checked:

Start-up without flame signalling
Darken the flame detector during start-up. At the end of the safety time, the automatic burner control system must either output a fault or perform a restart.

Start-up with flame signalling
Perform a start-up attempt of the automatic gas burner control system with the flame detector device exposed to external UV radiation, such as a cigarette lighter or gas flame (available room light is not sufficient). The automatic burner control system reports external light.

Burner operation
Darken the flame detector device while the burner is running. Depending on the parameter settings for the automatic gas burner control system, this will trigger a non-volatile lockout or safety shutdown followed by a restart attempt.

If malfunctions occur, the flame detector device must be replaced.
After a runtime of 10 000 hours, the flame detector should be replaced as a preventive measure.
It is not possible to replace the UV tubes.

FLW 10IR / FLW 10IR V2.1 /
KLC 20/230

The FLW 10IR/KLC is a flame detector device equipped with an IR sensor for monitoring burners with blue-burning flames.
The flame detector detects the flicker frequency of the flame. Light rays that emit a uniform frequency are filtered out. External light (e.g. light caused by glowing components or fluorescent tubes) is not detected as flame.
The flame signal intensity can be viewed directly using the optical LED display of the flame detector device.
The FLW 10IR/KLC is connected to the ionisation input of the MPA 41xx and is suitable only for intermittent operation.
The FLW flanges are suitable for mounting.



Technical data	
Rated voltage	230 VAC -15 % to +10 %
Frequency	50-60 Hz
Current consumption	3-4 mA
Output data	Typical response time with flame on: 0.5 sec. Response time to flame failure < 0.5 sec.
Switching output	Max. switching current 15 mA, Max. switching power 0.3 W Max. switching voltage 280 V AC / 400 V DC
Optical evaluation	Spectral range 380-1 150 nm, max. sensitivity at 920 nm Tolerated flame signal drops: Approx. 280 ms
Alignment to flame	Frontal
Protection class	IP 41
Ambient temperature	-20 °C to +60 °C
Storage and transport	-20 °C to +60 °C
Humidity	Max 95 % RH, no dewing permitted
Installation position	Any
Max. line length	10 m

Dimensions [mm]
FLW 10IRx/KLC

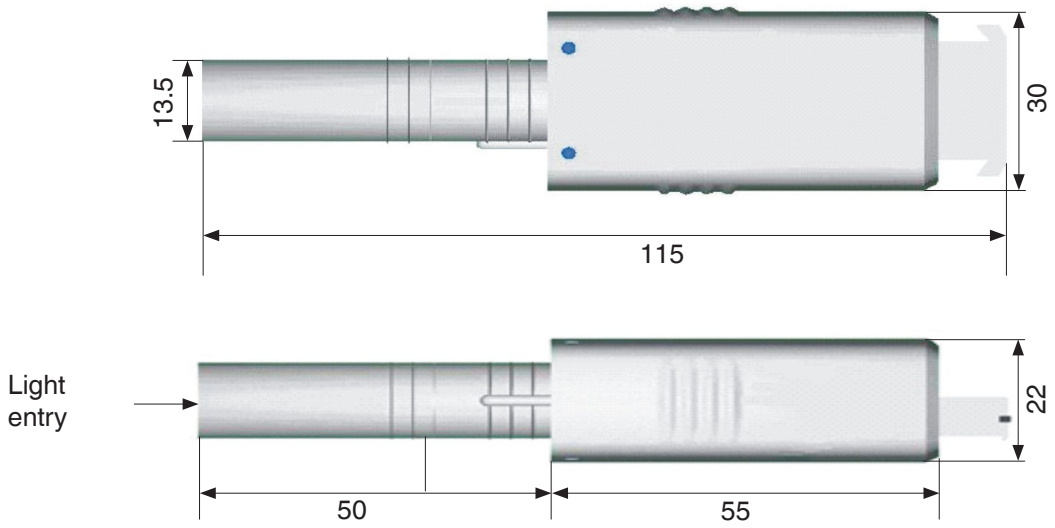

FLW flange

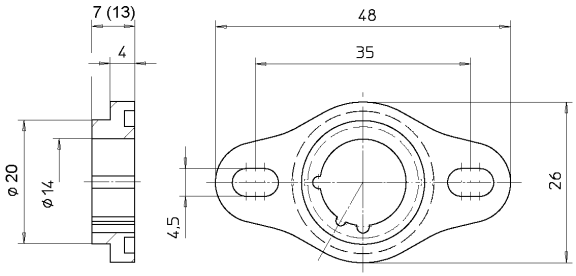

Installation

The FLW 10IRx/KLC must be installed as close as possible to the flame to be monitored.
It is installed using an FLW flange (height 7 or 13 mm) or a mount with a 14 mm installation aperture.
The flame detector device must be firmly inserted into the mount. No external light is permitted to fall on the sensor, and a direct line of sight to the ignition spark must also be avoided.

Attention: The maximum permitted line lengths must not be exceeded. Supply and signal lines must be laid separately, to the extent possible.

Electrical connection

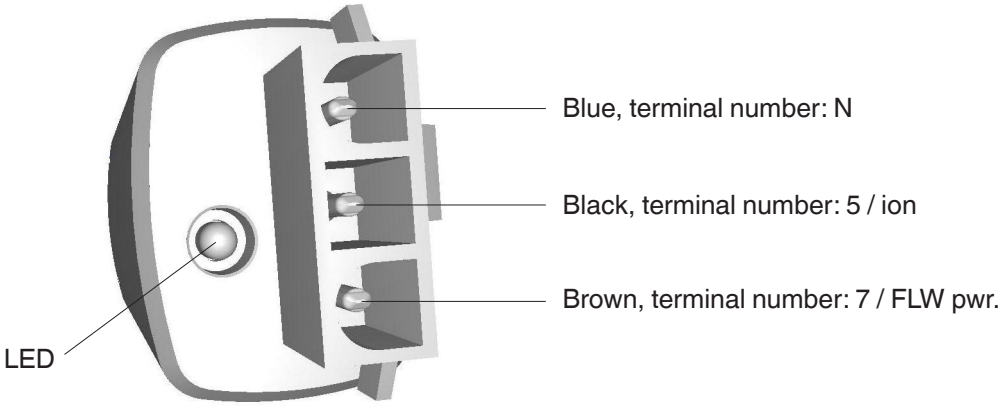

Operating display LED

The flame signal intensity recorded by the FLW 10 IR flame detector device is shown using the built-in LED.

LED off
FLW is de-energised or no flame is detected

LED flashes
Flame detected; the number of flashing pulses of the LED indicates the flame signal intensity: increasing flashing pulses = higher intensity

LED permanently on
Flame detected at the highest flame intensity

Commissioning and maintenance

The FLW 10IRx/KLC is maintenance free.

FLW 41I

The flame detector device module FLW 41I is connected to the second detector device input of the MPA 41xx.
The flame is monitored using an ionisation electrode.
This allows burners to be monitored using two measuring points.
The module is suitable for intermittent operation. It is also suitable for continuous operation when used together with an electronic shutter signal (e.g. EM 2/4).



Technical data

General information for FLW 41	
Rated voltage	230 VAC -15 % to +10 %, supplied via MPA 41xx FLW pwr.
Frequency	50-60 Hz
Power consumption	< 3 W
Protection class	IP 54
Ambient temperature	-40 °C to +70 °C
Storage and transport	-40 °C to +80 °C
Humidity	DIN 60730-1, no dewing admissible
Installation position	Any
Dimensions in mm (LxHxD)	Approx. 152.5 x 151.5 x 77 mm
Weight	0.6 kg
Max. line length to MPA	100 m
Max. line length for ionisation	10 m

Dimensions

FLW 41I

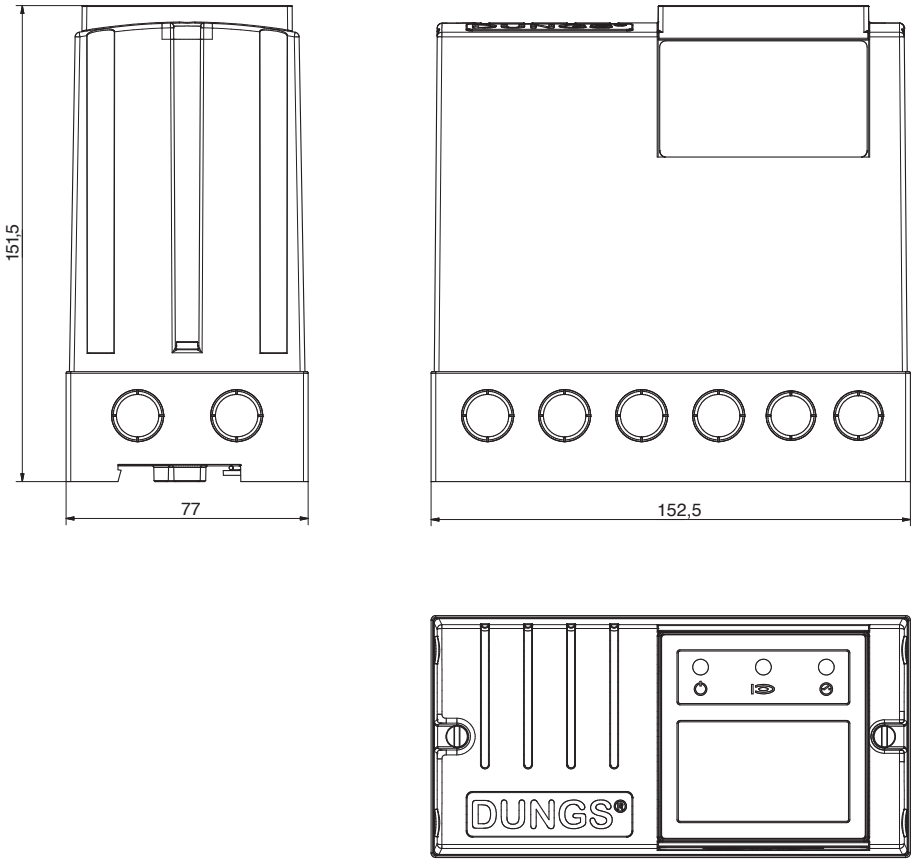

Installation
The FLW 41 can be mounted either on a hat rail or using a direct screw connection (all dimensions are the same as for the MPA 411)

Attention
The maximum permitted line lengths must not be exceeded.
Supply and signal lines must be laid separately.

Role
The FLW 41 enables a flame to be monitored at two measuring points or two flames to be monitored independently of each other.
If the shutter signal of the MPA 41xx is connected, the FLW 41 is suitable for continuous operation.

Example:

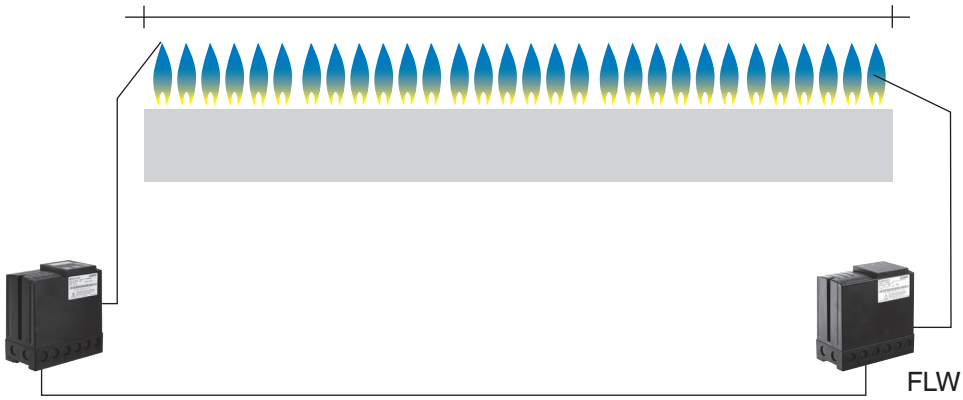

MPA 41xx
Flame detector device 1

FLW 41I
Flame detector device 2

Display

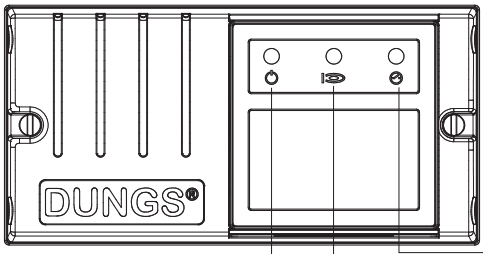

Shutter signal
Flame signal
Power supply ON

Electrical connection

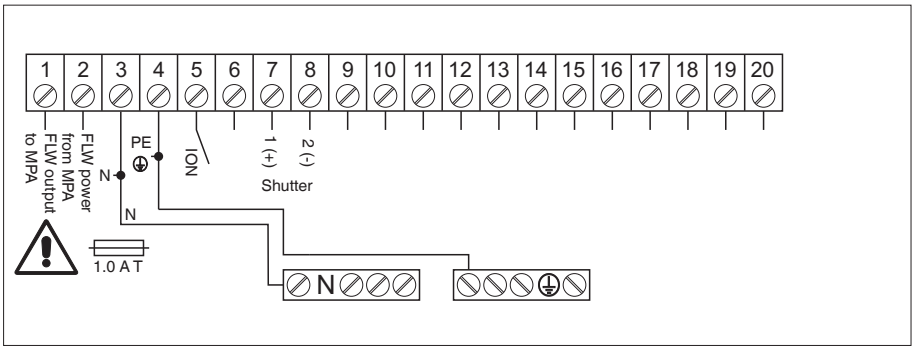

The flame detector device is also supplied with 230 VAC in the 115 VAC version via "Supply Flame Detector", terminal 7.

DEZ ignition transformers

Technology

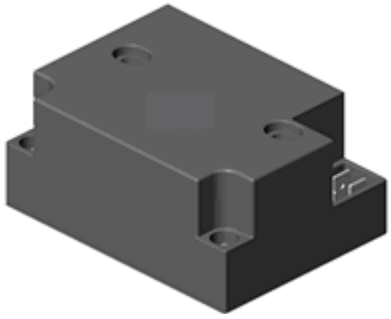

The DUNGS DEZ units are electronic, high-performance ignition transformers with high-frequency oscillation technology.
The DEZ is much smaller and lighter than conventional inductive ignition transformers.
Versions for one or two ignition electrodes are available in different voltage variants.

Application

For oil and gas burners, ignition takes place with one ignition electrode against the burner mass or with two ignition electrodes between the electrodes, depending on the version.

Certification

2014/35/EU Low Voltage Directive
2014/30/EU EMC Directive

DEZ function

DEZ ignition transformers are available in two versions:
either with one high-voltage output (DEZ 1xx) for ignition against the burner mass or with two high-voltage outputs (DEZ 2xx) for ignition between the electrodes.

Both versions are available with different performance data.
The "SEO" versions must be used in burner systems in which ignition and ionisation flame monitoring are performed using a common electrode.

DEZ 1xx

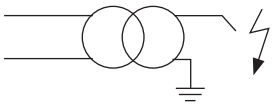

DEZ 2xx

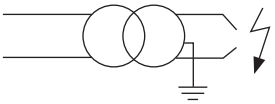

DEZ Versions	DEZ 100	DEZ 101	DEZ 100 SEO	DEZ 101 SEO	DEZ 200
High-voltage outputs	1	1	1	1	2
Main voltage [VAC]	230/240	120	230	120	230/240
Frequency [Hz]	50/60	50/60	50/60	50/60	50/60
Current consumption [A]	0.3	0.5	0.3	0.5	0.14
Power consumption [VA]	69	55	69	60	32
Secondary voltage [kV] +/-10 %	1 x 15	1 x 15	1 x 15	1 x 15	2 x 10
Secondary frequency [kHz]	10	13	10	16	10
Short-circuit current [mA]	30	30	30	30	20
Duty cycle 3 min	33 %	33 %	33 %	33 %	100 %
Protection class	IP 54	IP 54	IP 54	IP 54	IP 54
Ambient temperature ta [°C]	-20…60 °C	-20…60 °C	-20…60 °C	-20…60 °C	-20…60 °C
Weight [kg]	0.32	0.32	0.32	0.32	0.32
Article no.	252113	255018	257126	257127	252114

Electrical connection

The connection to mains power is made using the pre-fabricated connection lines DEZ 1xx / 2xx, which are available in different lengths.

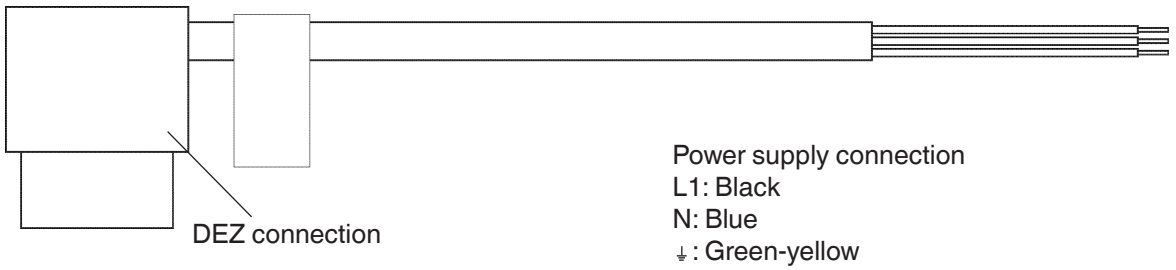

The ignition electrodes are connected using pre-fabricated carbon fibre ignition lines. The high line resistance of 10 kOhm/m effectively suppresses EMC faults.

The ignition lines are fitted with an insulated 6.5 mm angle plug on the electrode side.



Dimensions

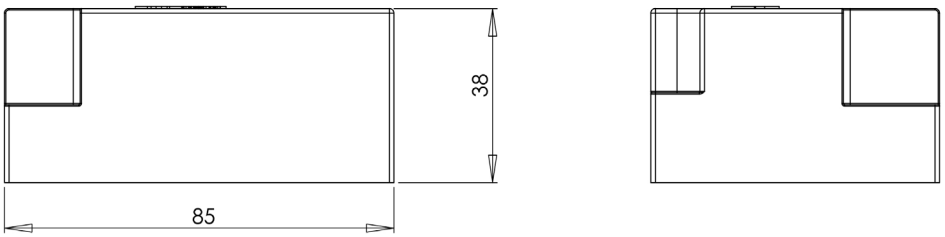

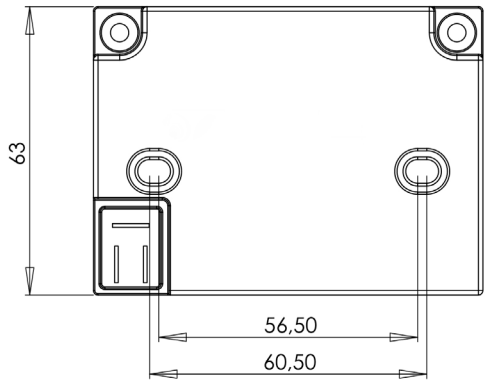

Attention
The operation of the DEZ ignition transformers produces very high voltages. The ignition transformers may be put into operation only if the ignition electrodes are built into the burner / burner chamber in a way that prevents touch contact and all live connections are made using the lines provided for this purpose in a way that prevents touch contact.

The length of the ignition cable should be as short as possible. Cable lengths > 1 m should be avoided wherever possible.

The protective earth must always be connected.
In the "SEO" version for single-electrode operation, the protective earth is connected to terminal 5 of the MPA 41xx.

VisionBox
The VisionBox provides access to the MPA using a PC.
See the VisionBox documentation

DUNGS®
Combustion Controls

www.dungs.com

Karl Dungs GmbH & Co. KG
Karl-Dungs-Platz 1
D-73660 Urbach, Germany
Telephone +49 7181-804-0
Fax +49 7181-804-166
info@dungs.com
www.dungs.com